University of Pavia

Integrated Micorsystem Group

The World of Analog Micropower

Franco Maloberti

franco.maloberti@unipv.it

1904 Electronics was born in …

Electronics is a young discipline. It was initiated in 1904 when, after some related inventions, J. A. Fleming conceived the first electronic device: the vacuum tube diode.

1904

Two years later L. Deforest added a third terminal, the grid, and invented the vacuum tube triode.

1947 The first step of modern electronics

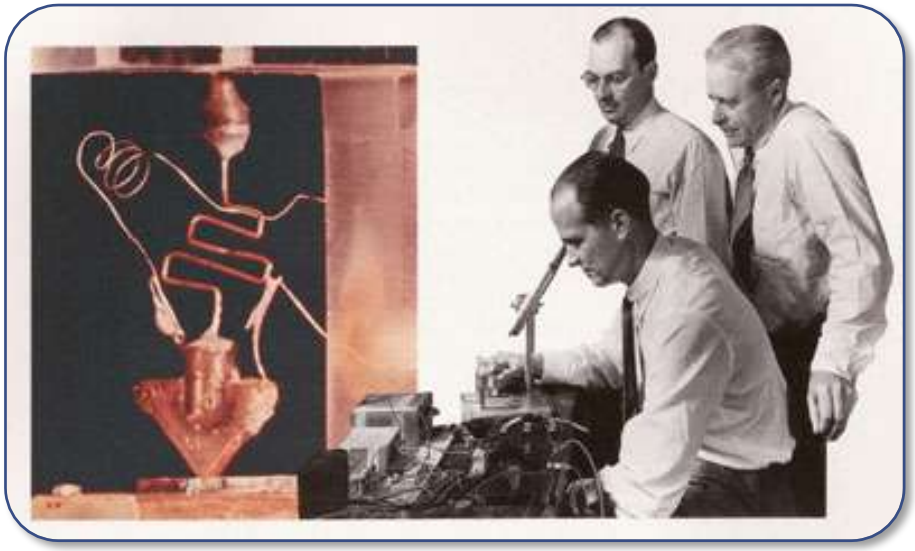

FirstTransistor. Bell Laboratories.
December 16, 1947

William Shockley (seated)
John Bardeen (left)
Walter Brattain (right)

1958 The beginning of integrated electronics

In 1958 Jack Kilby, newly employed, had been set to work on a project to build smaller electrical circuits. Because he was newly employed, that summer Kilby had no vacation like the rest of the staff. Working alone in the lab, he saw an opportunity to find a solution of his own to the miniaturization problem: the integrated circuit.

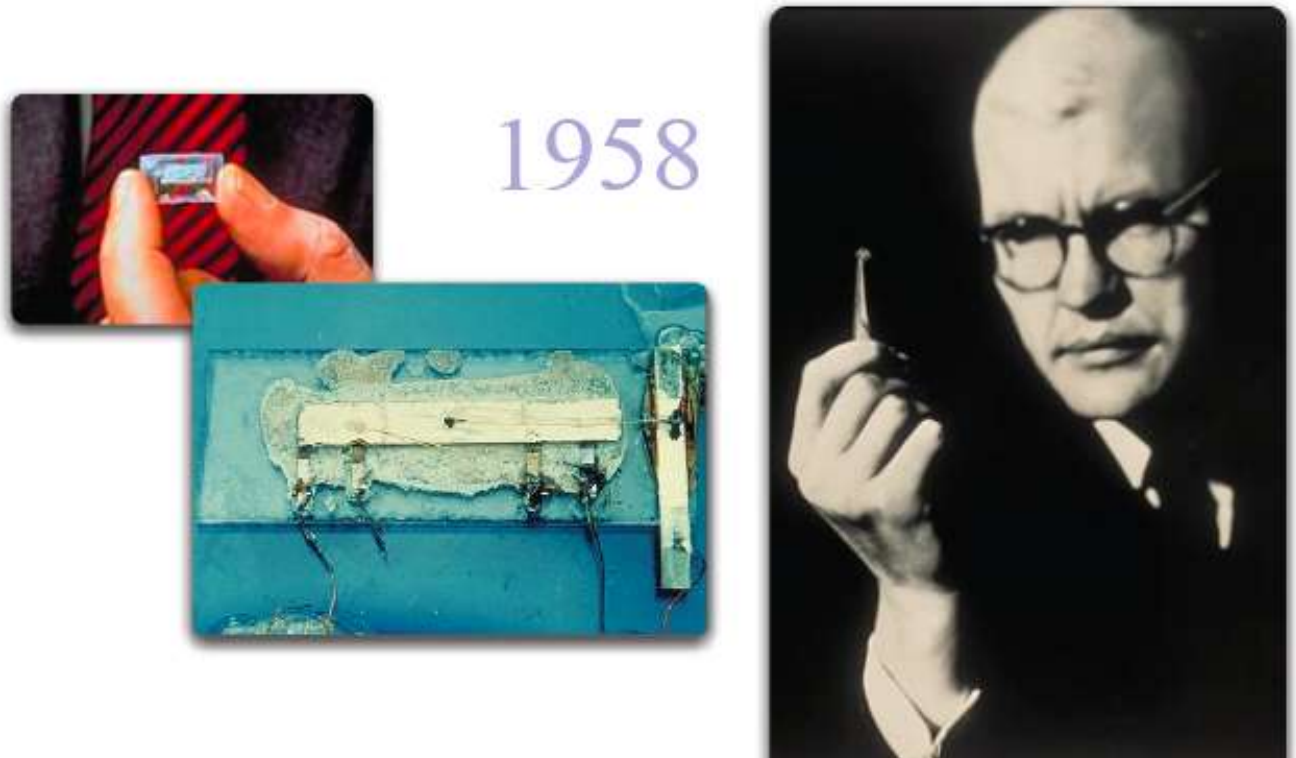

1959 The beginning of integrated electronics

In January of 1959, Robert Noyce, at the small Fairchild Semiconductor startup company, also realized a whole circuit could be made on a single chip. Noyce thought of the best way to connect the parts.

1959

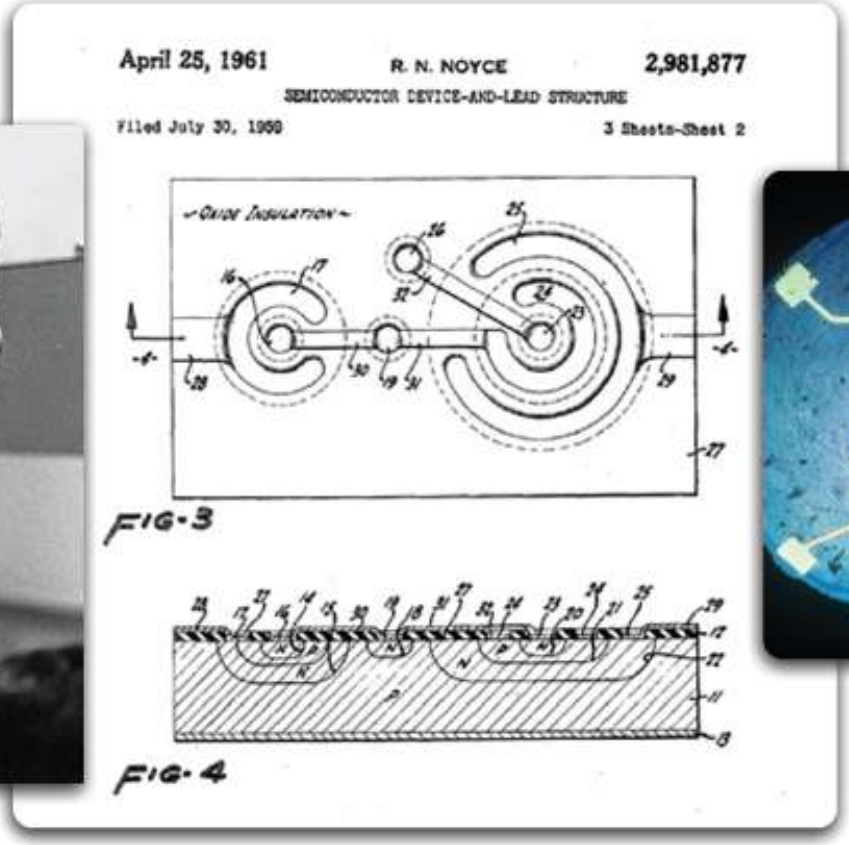

April 25, 1961 R. N. NOYCE 2,981,877

SEMICONDUCTOR DEVICE-AND-LEAD STRUCTURE

Filed July 30, 1959 3 Sheets-Sheet 2

FIG. 3

FIG. 4

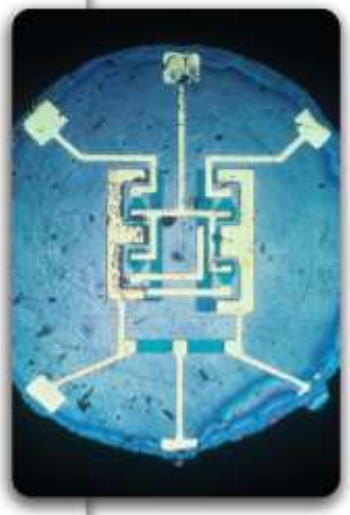

2000 +

Nowadays many integrated circuits are made only of transistors with total count that approximately doubled every two years. Some digital circuits contain billions of elementary components, each of them extremely small.

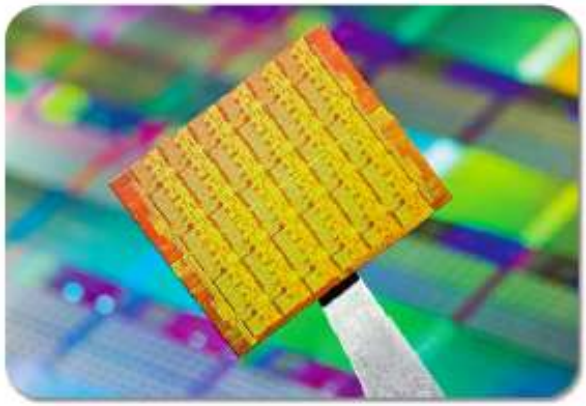

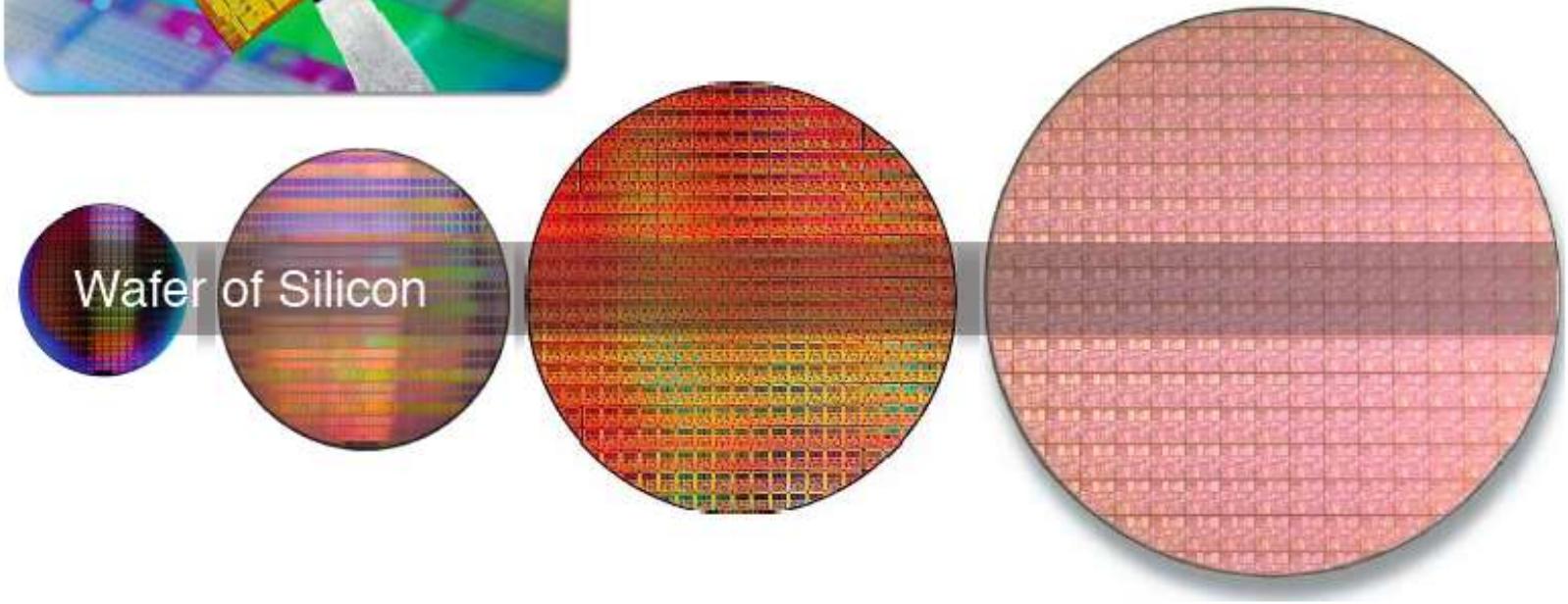

Analog Circuits

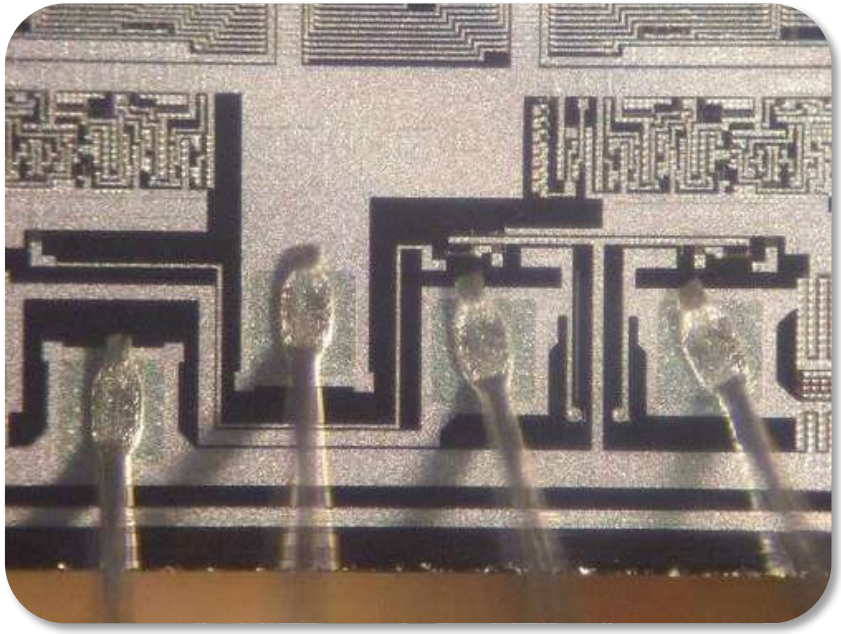

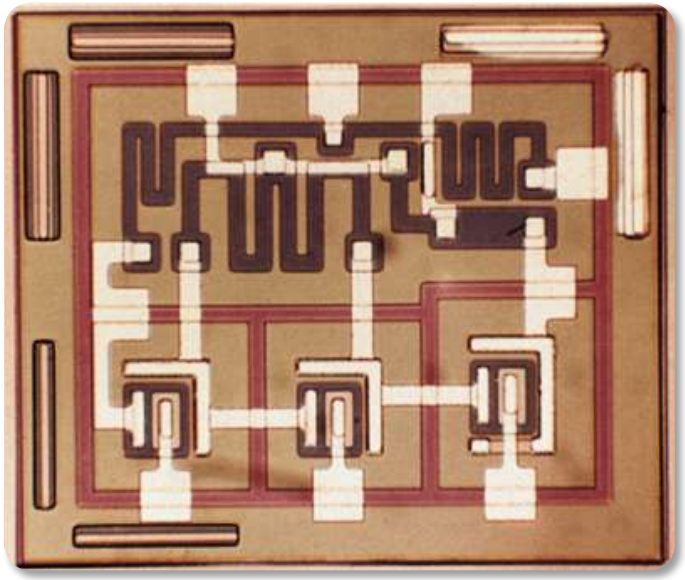

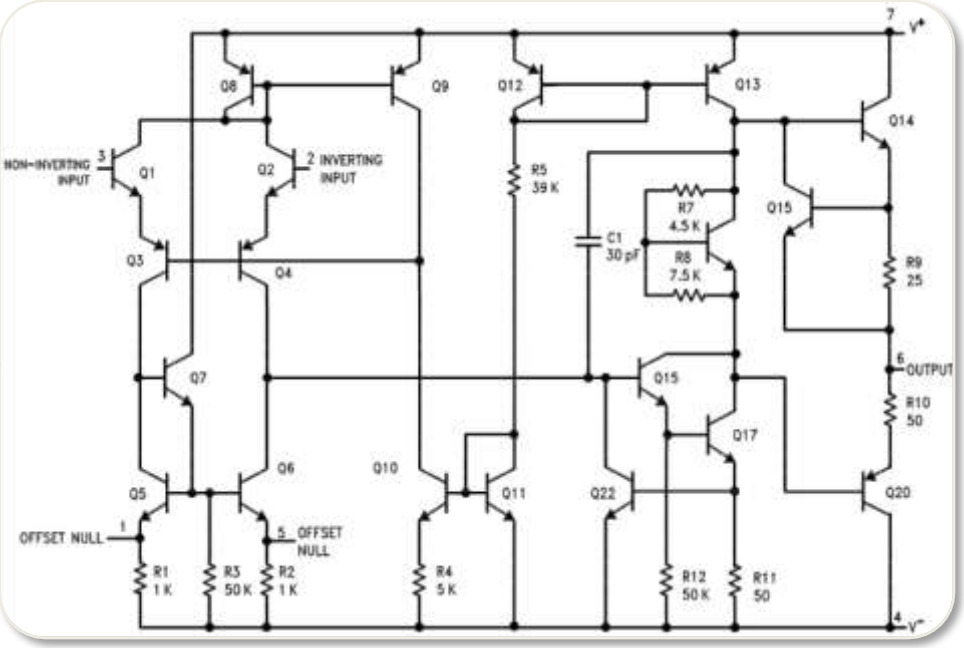

And Digital

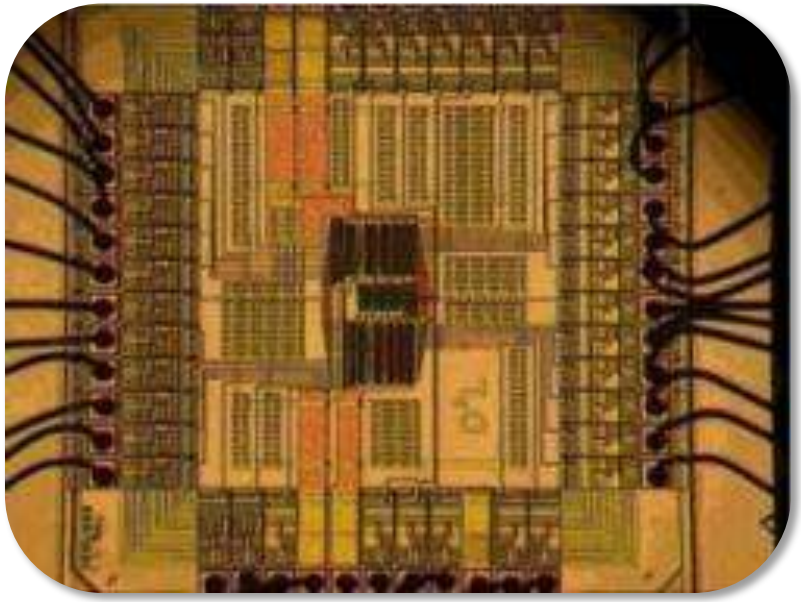

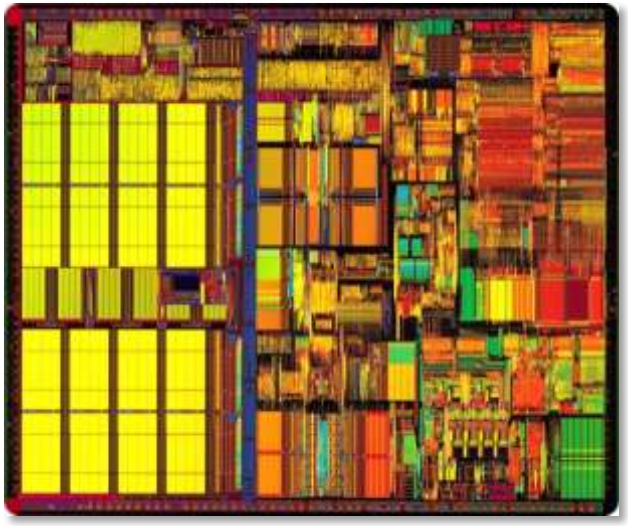

intel
pentium III

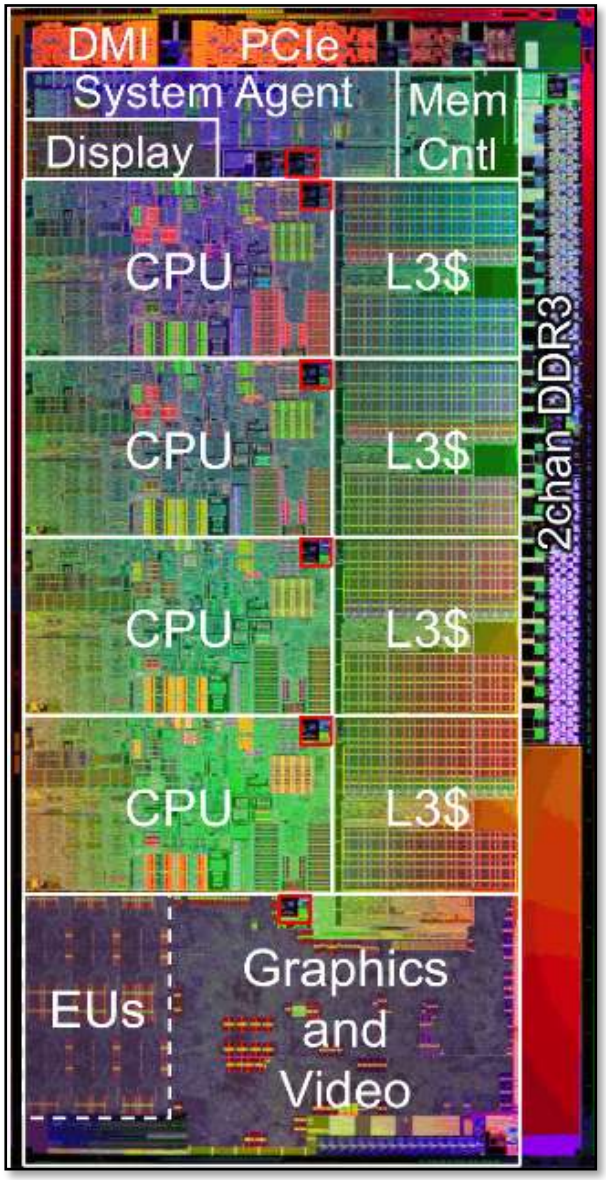
DMI
PCIe
System Agent
Display
Mem Cntl
CPU
L3$
CPU
L3$
CPU
L3$
CPU
L3$
2chan DDR3
EUs
Graphics and Video

The microprocessor(μp)

Moore's Law

"The number of transistors on a piece of silicon would double every couple of years"

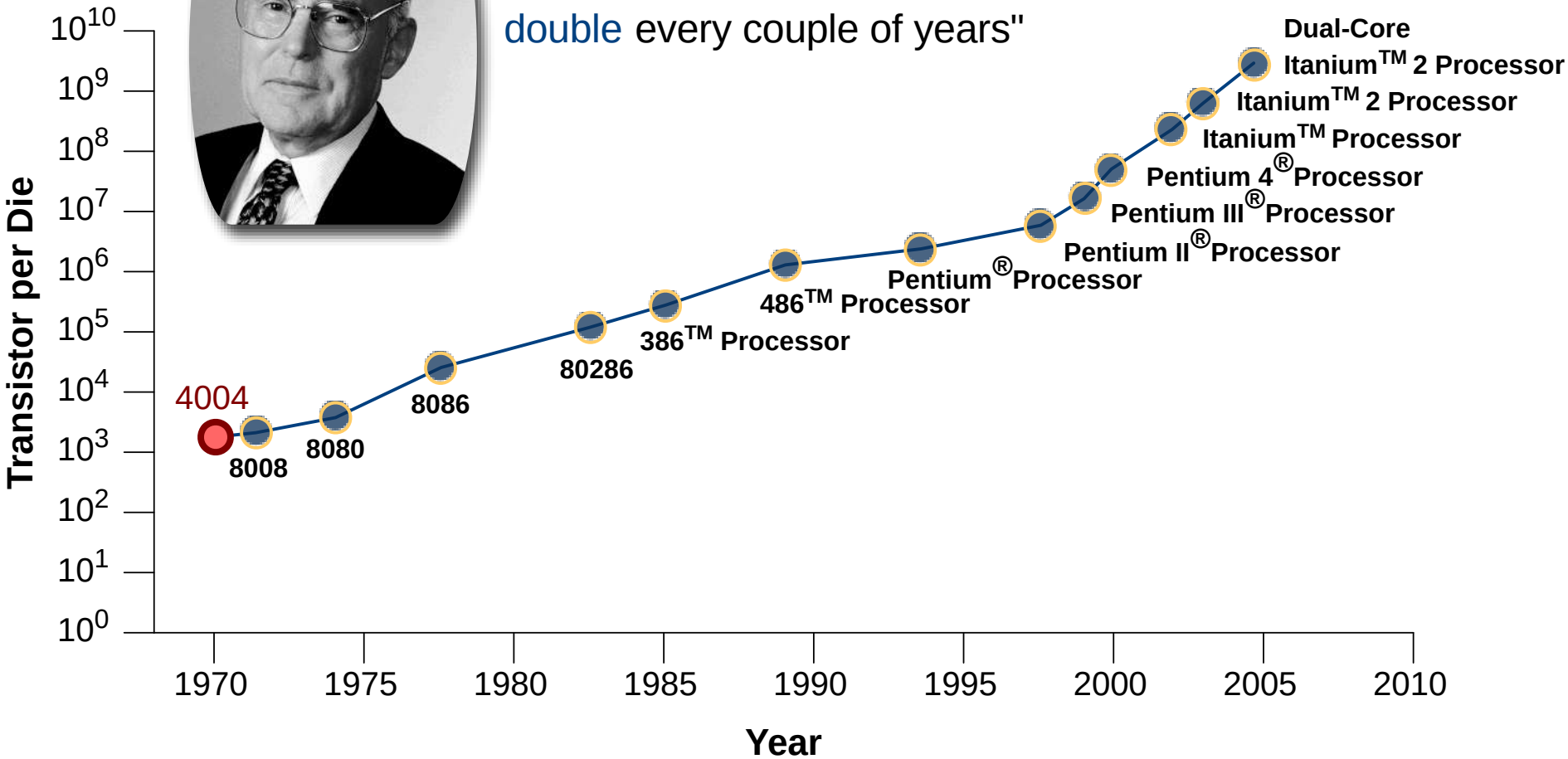

Big changes

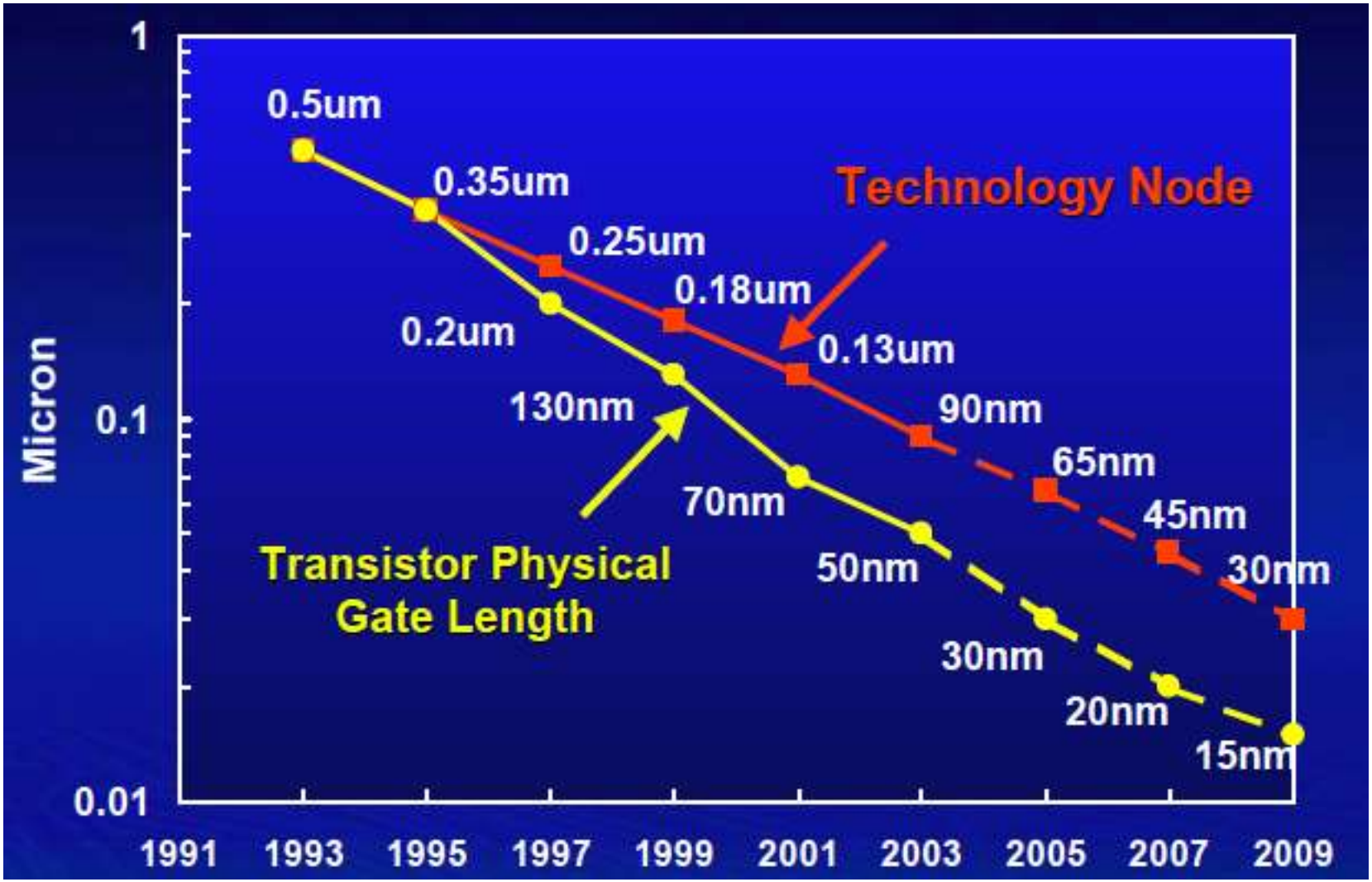

Courtesy Stefan Rusu Intel

Power consumption

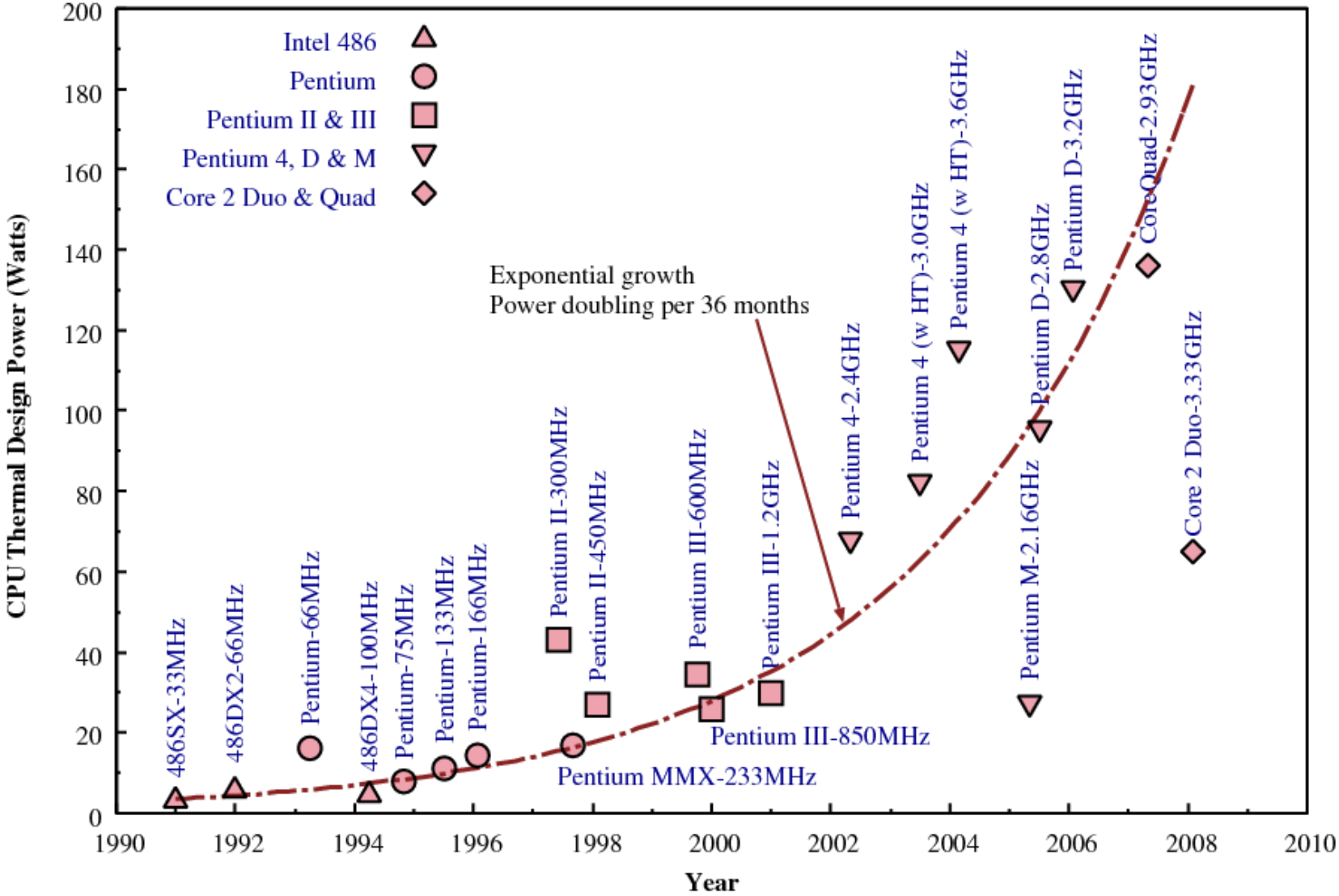

WILL DIGITAL DOMINATE …

AND ANALOG FADE?

CERTAINLY NOT!

BUT

Miniaturization
Versus
Diversification

Miniaturization versus Diversification

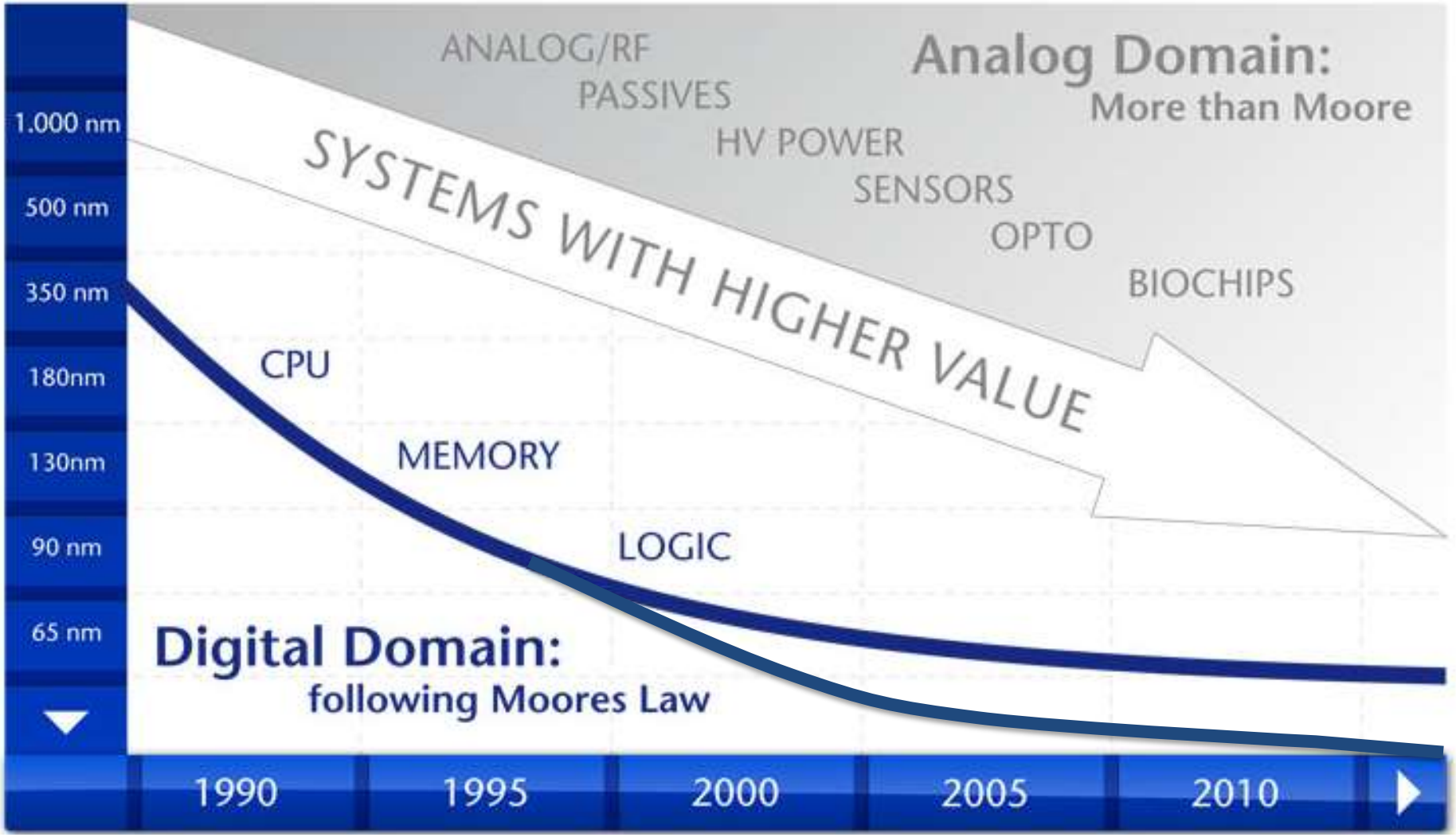

Moore Law: Transistros density doubles every 18 months

Valid for pure digital design

Many analog functions do not scale

Solution:
More than Moore

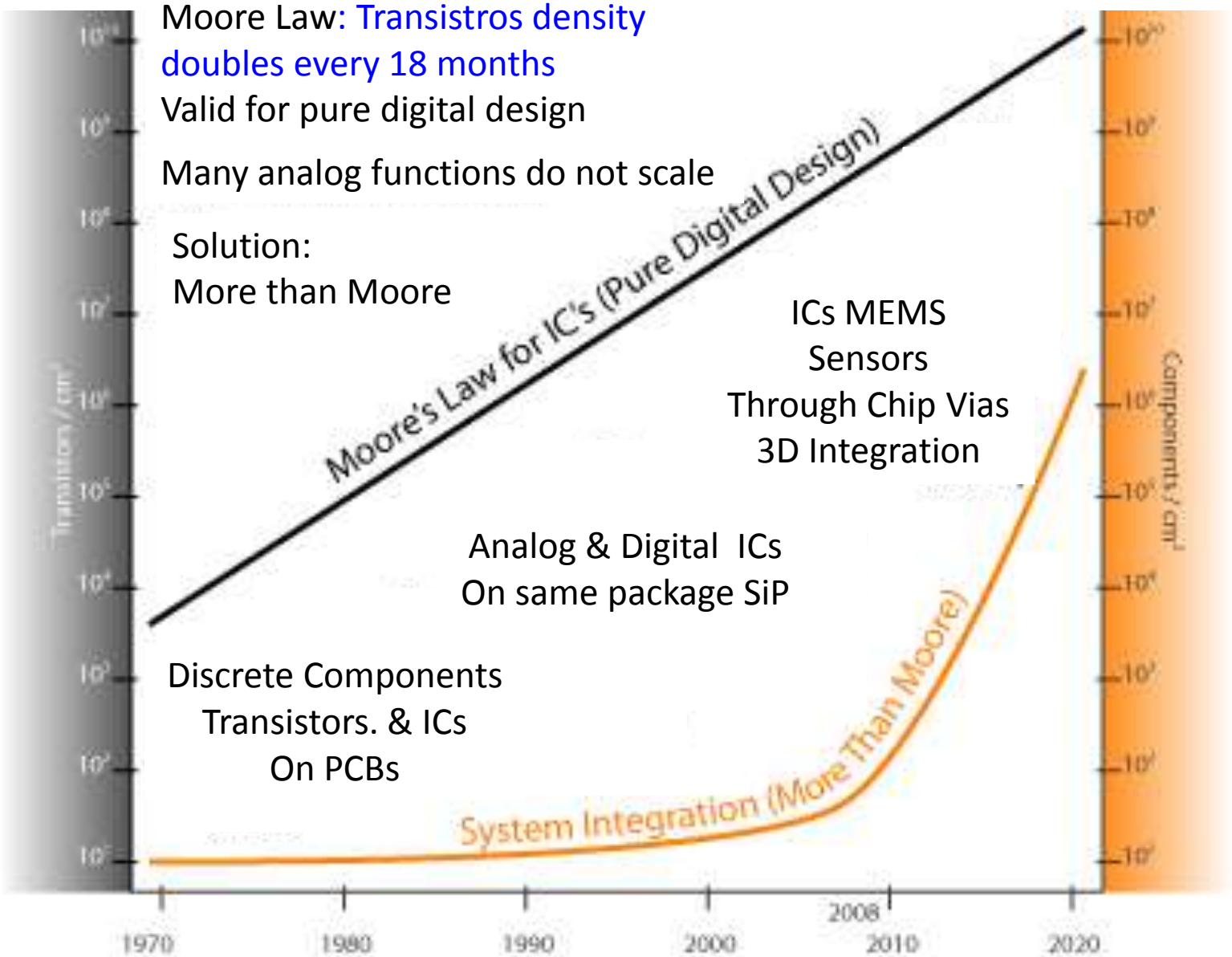

ICs MEMS
Sensors
Through Chip Vias
3D Integration

Analog & Digital ICs
On same package SiP

Discrete Components
Transistors. & ICs
On PCBs

Embedded Thin-Film Components Developed for System-on-Package

DIGITAL
- Decoupling capacitors
- Ultra-low-loss dielectric materials
- Stable core materials
- Low-resistance global copper interconnects

RF
- Filters
- Switches
- Antennas
- Decoupling capacitors
- Resistors
- Inductors

OPTOELECTRONICS
- Semiconductor thin-film lasers/detectors
- Organic/inorganic waveguides and gratings
- Lenses and mirrors

SENSORS
- Nanoscale bioelectronic structures
- Resonators for sensing biological chemicals
- Liquids that emulate body fluids

MARKET AND SOCIETY TREND

Florianopolis-Brazil
F.Maloberti

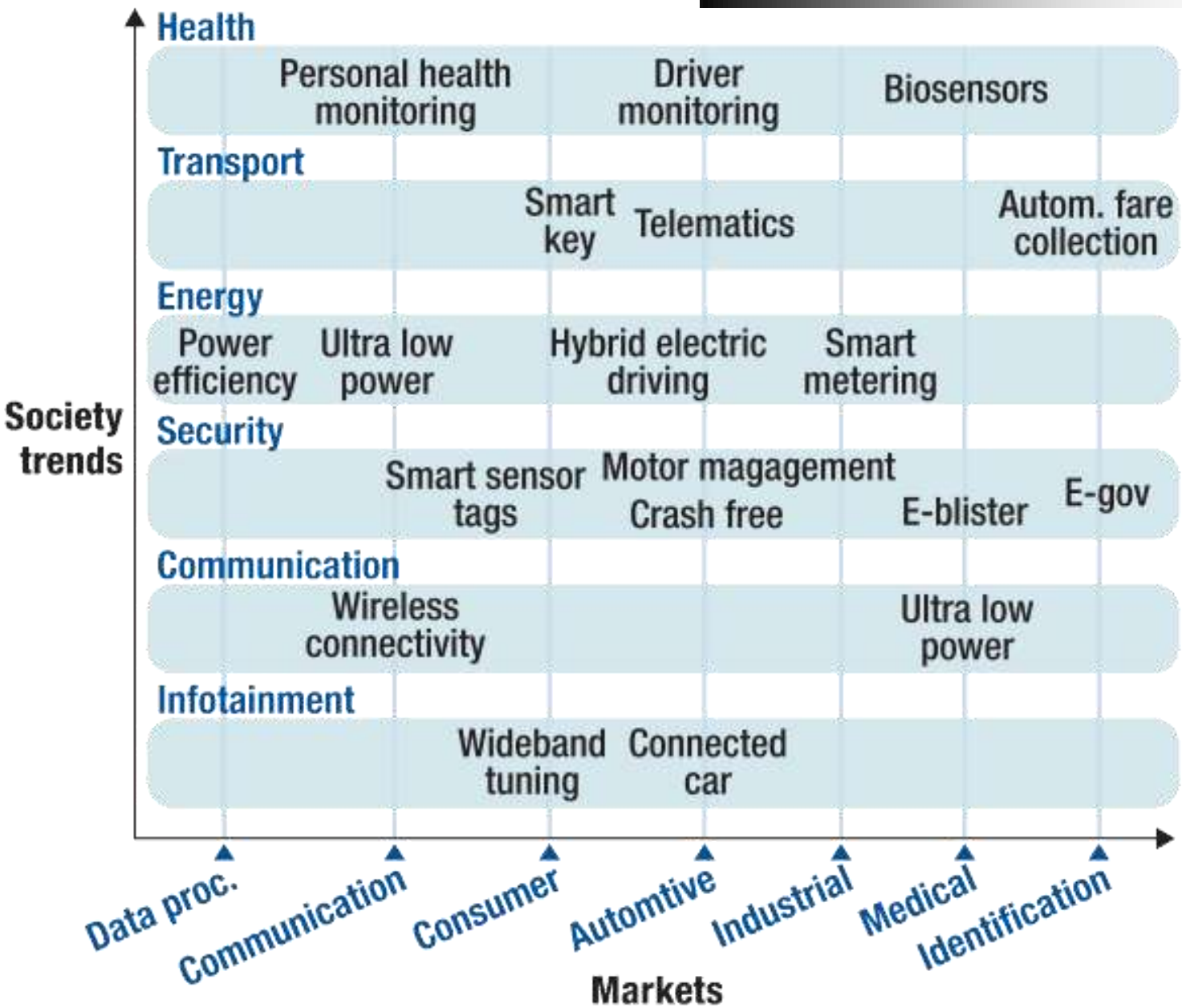

Key requirements for microsystems

- Sensors
- Analog processing and data conversion
- Low power and short range communication

Microelectronics and quality of life

Textile sensors

Textiles capable to measure
Bio-mecanical and physiological signals

- Smart materials embedded into fibers
- For multi-parameter analysis

Courtesy Prof. Danilo De Rossi Univ. Pisa

Textile for sensors

Research in material science

Electrical properties

- Metalic wires
- Conductive coating

Benefit:

✓ **Low cost**

Multisensor systems in a garmet

✓ **Wearability**

Bekinox® VS is a sliver of 100 % stainless steel fibres.

Courtesy Prof. Danilo De Rossi Univ. Pisa

ECG

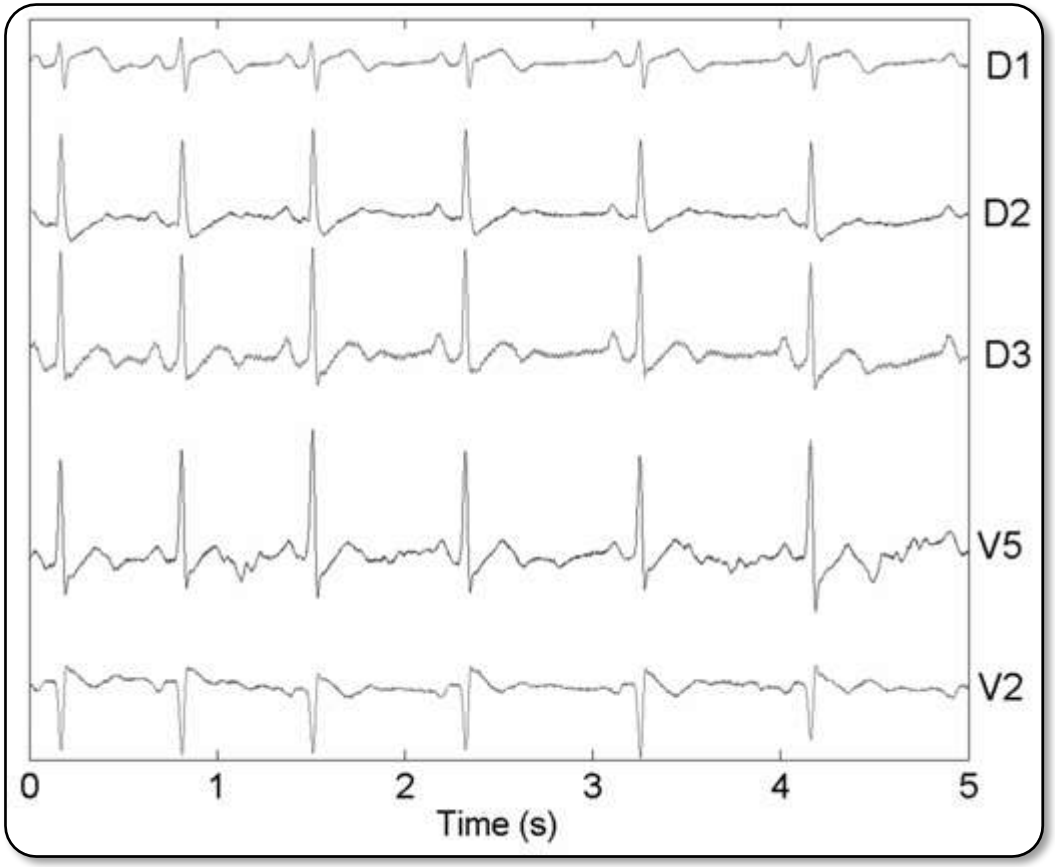

5 signals at the same time

- Einthoven Leads: D1, D2, D3
- Precordial Leads: V2, V5

Courtesy Prof. Danilo De Rossi Univ. Pisa

Safety

Smart sensor system

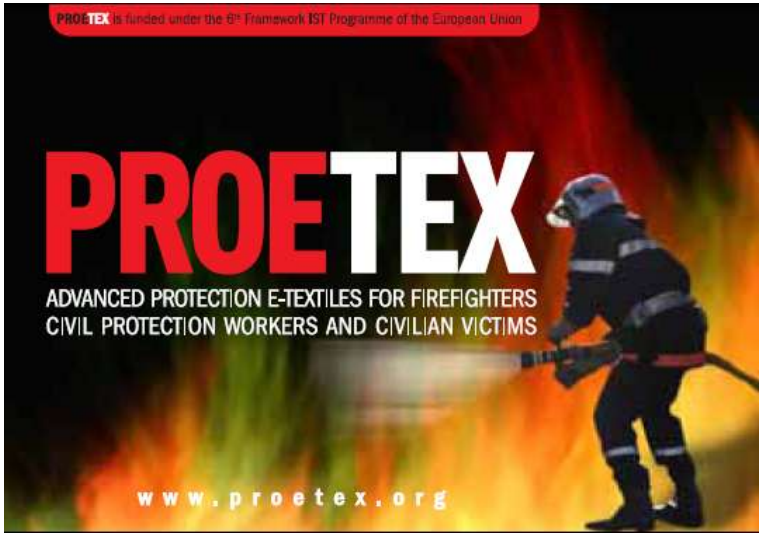

PROETEX
TEXTILES FOR

Courtesy Prof. Danilo De Rossi Univ. Pisa

Antennas for communication

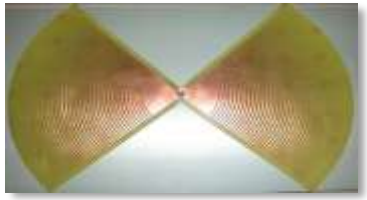

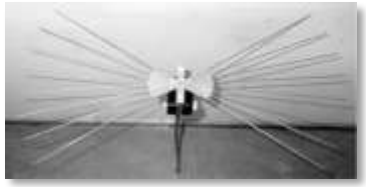

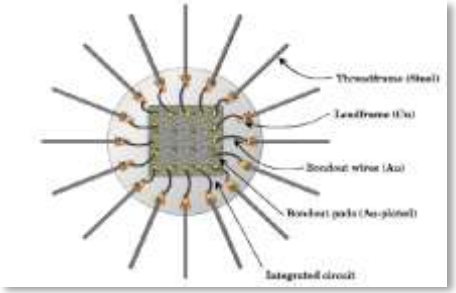

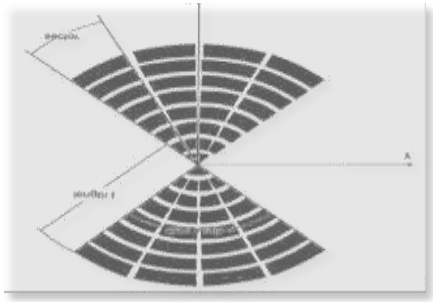

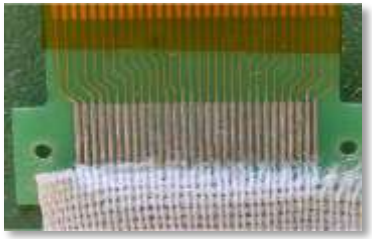

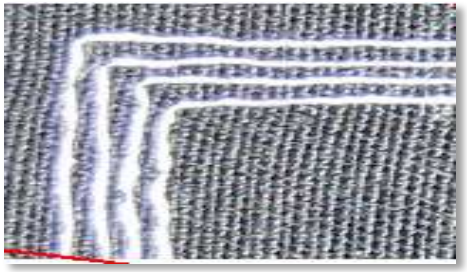

Courtesy Prof. Danilo De Rossi Univ. Pisa

An example

- Sensors
- Analog and digital processing
- Micropower and Communication

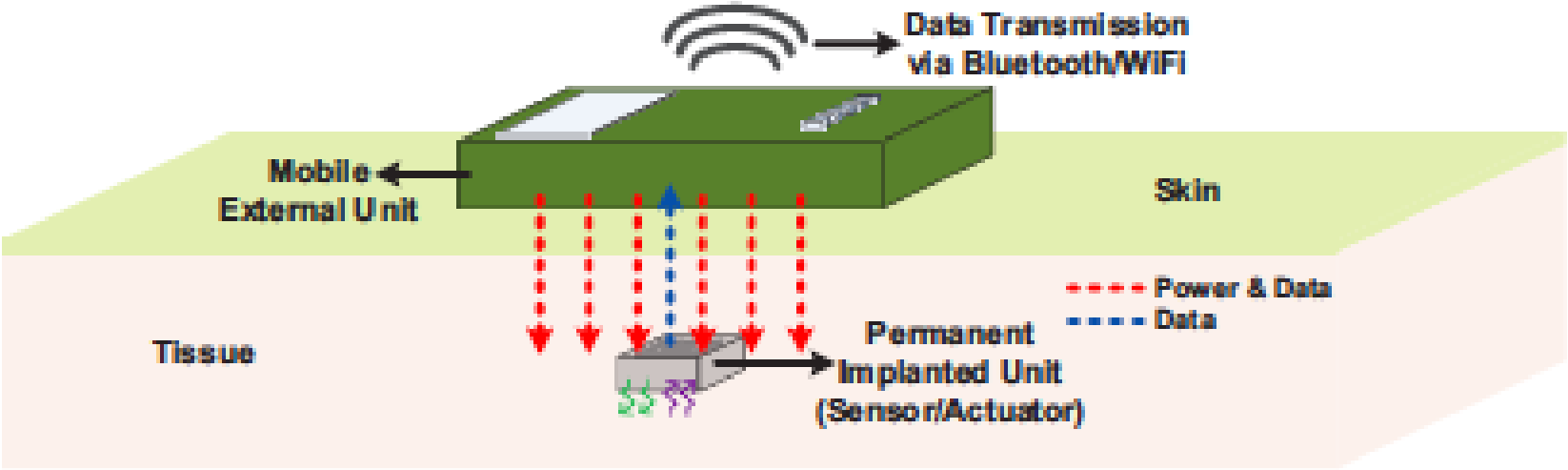

An example

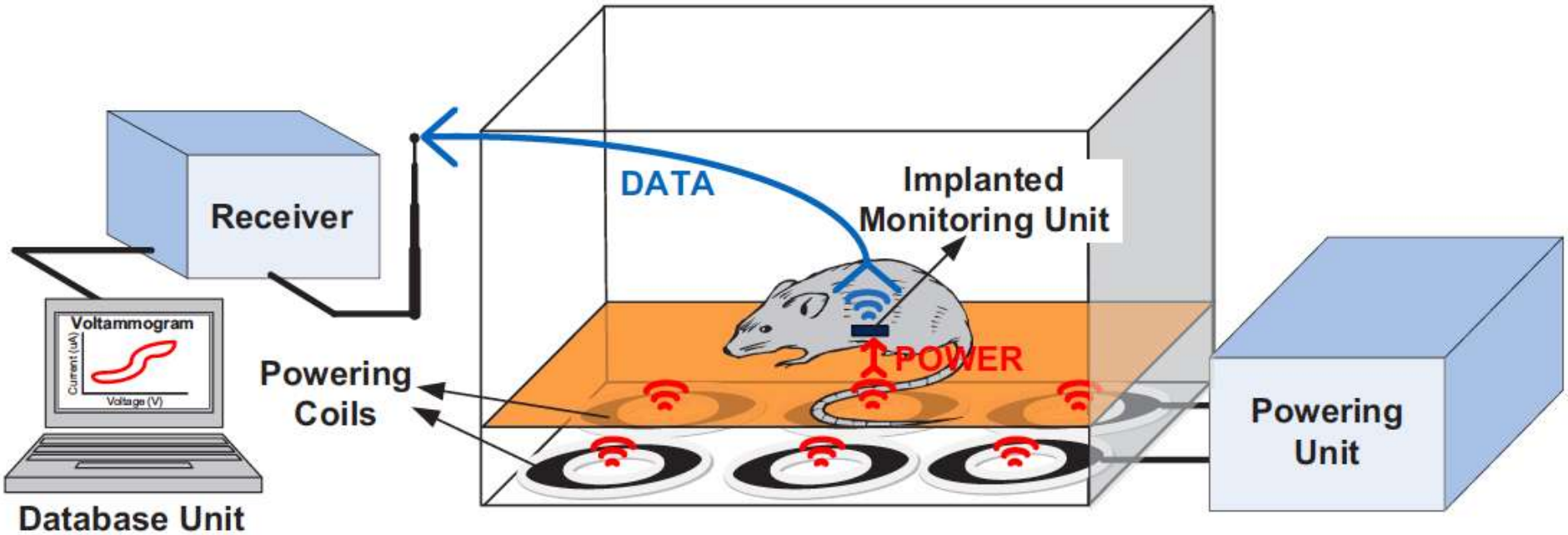
Receiver
DATA
Implanted
Monitoring Unit
Voltammogram
Current (uA)
Voltage (V)
Powering
Coils
POWER
Powering
Unit
Database Unit

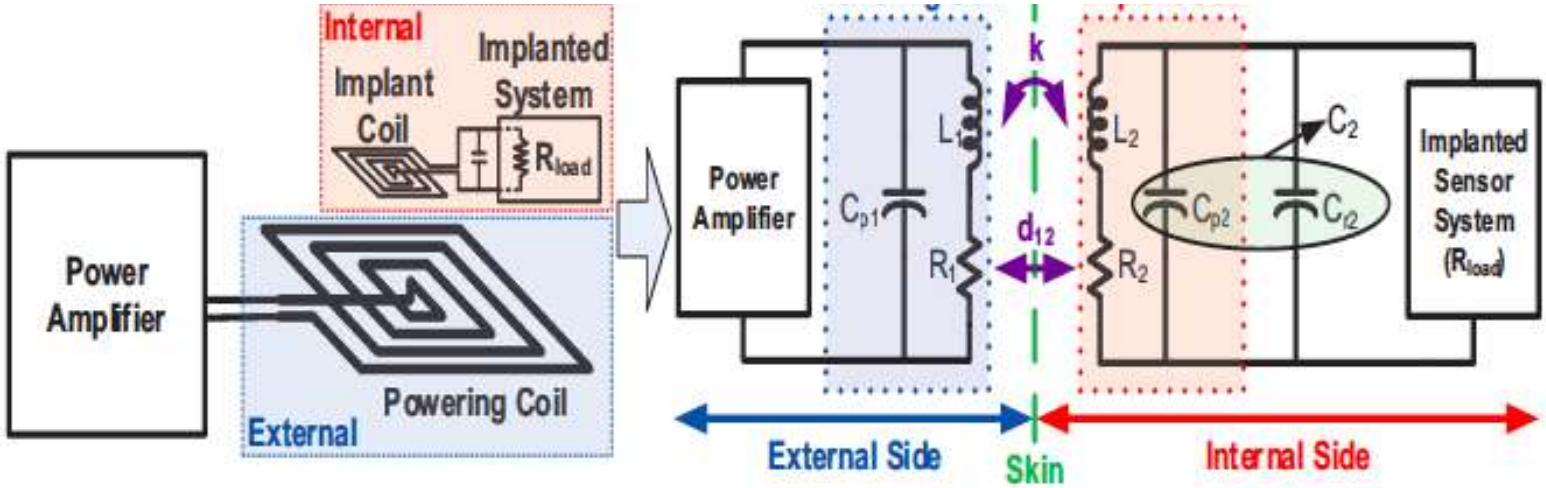
Internal
Implant
Coil
Implanted
System
R_{load}
Power
Amplifier
Powering Coil
External
Power
Amplifier
C_{p1}
L_1
R_1
k
d_{12}
L_2
R_2
C_2
C_{p2}
C_{r2}
Implanted
Sensor
System
(R_{load})
External Side
Skin
Internal Side

Power from ….

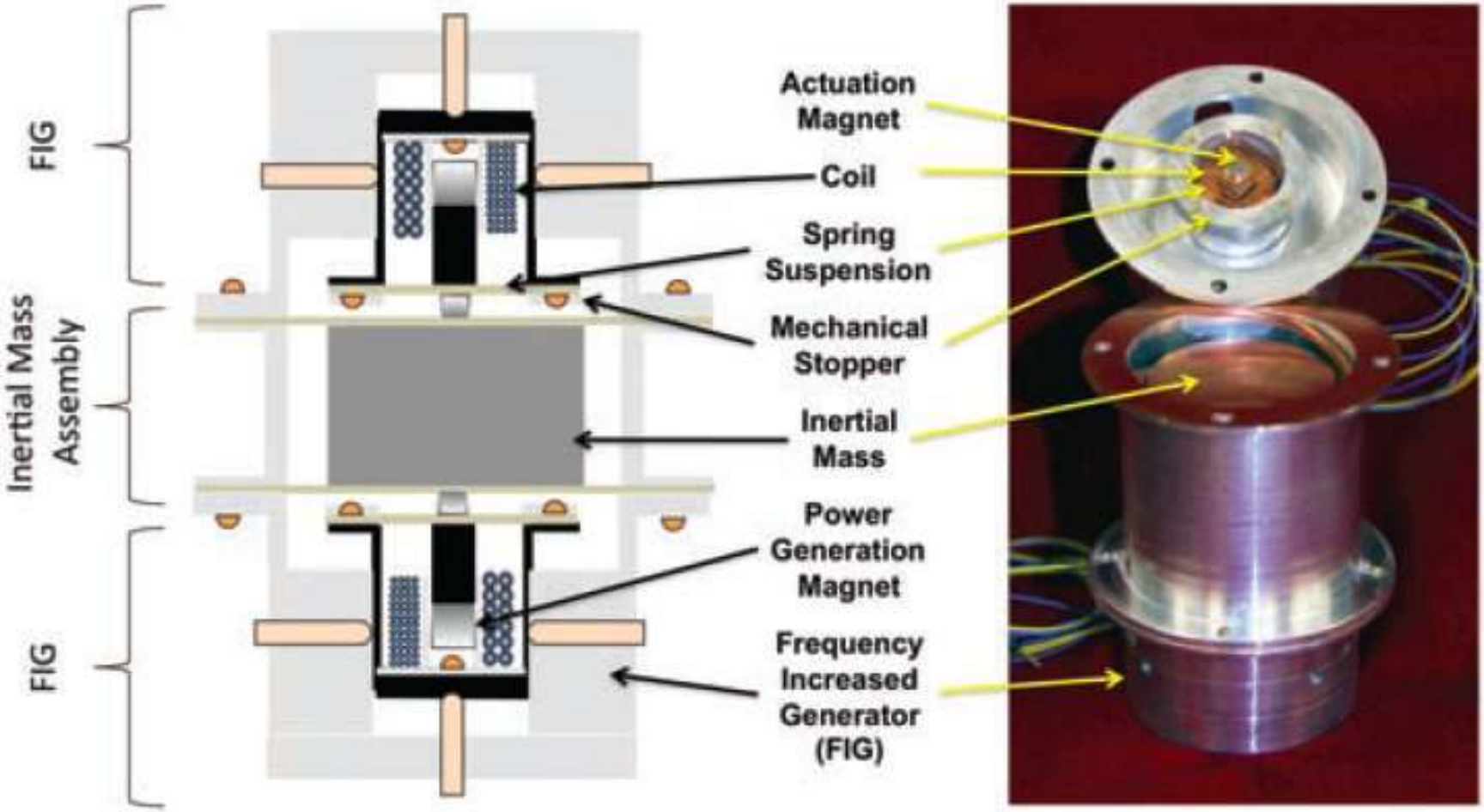
FIG
Inertial Mass Assembly
FIG
Actuation Magnet
Coil
Spring Suspension
Mechanical Stopper
Inertial Mass
Power Generation Magnet
Frequency Increased Generator (FIG)

Thermoelectric

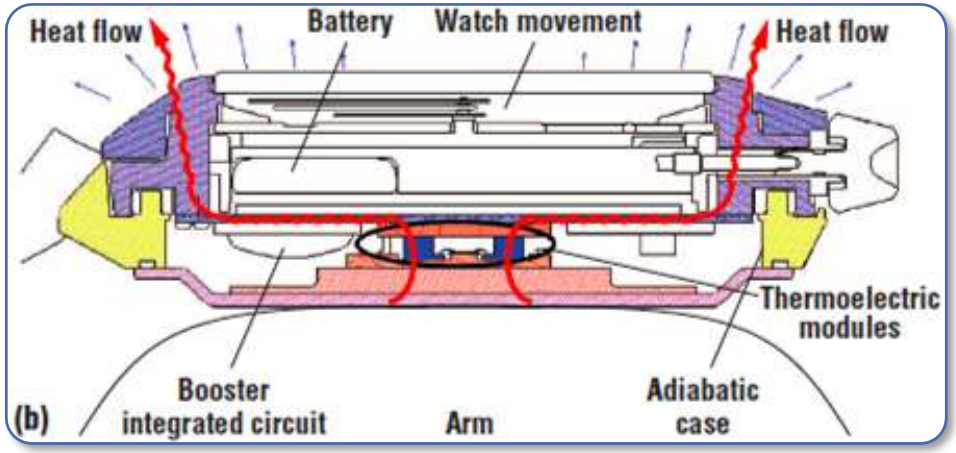

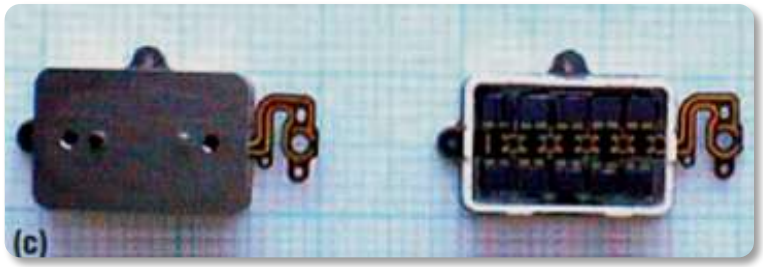

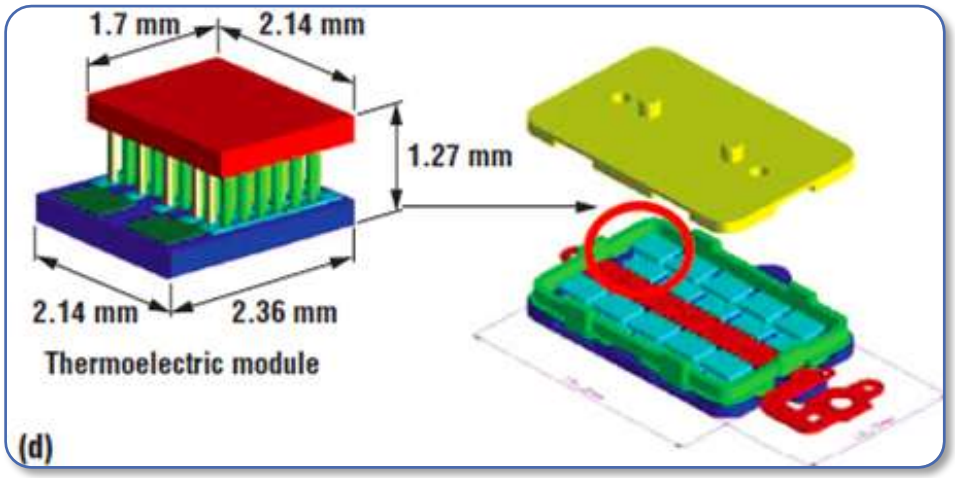

Mechanical energy

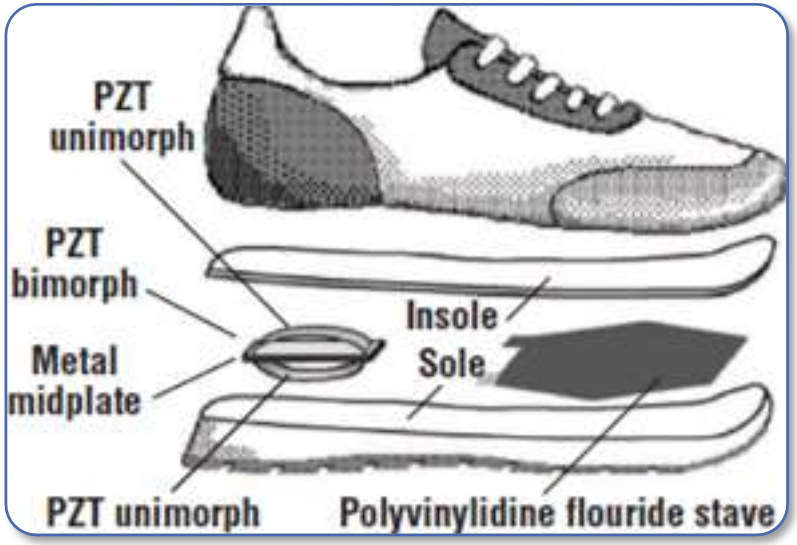

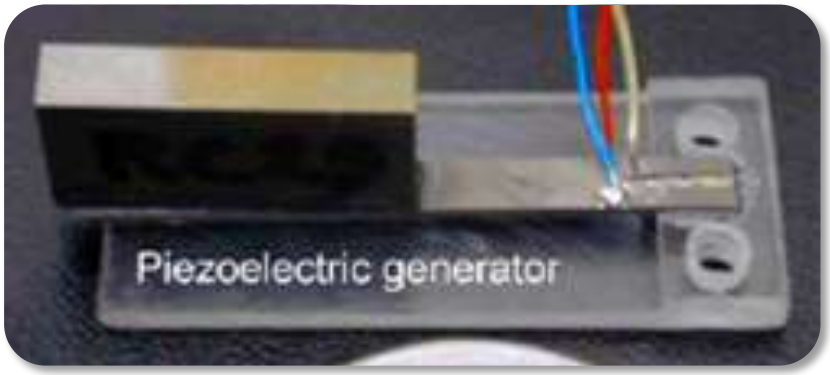

Florianopolis-Brazil
F.Maloberti

Vibration, microbes based, light

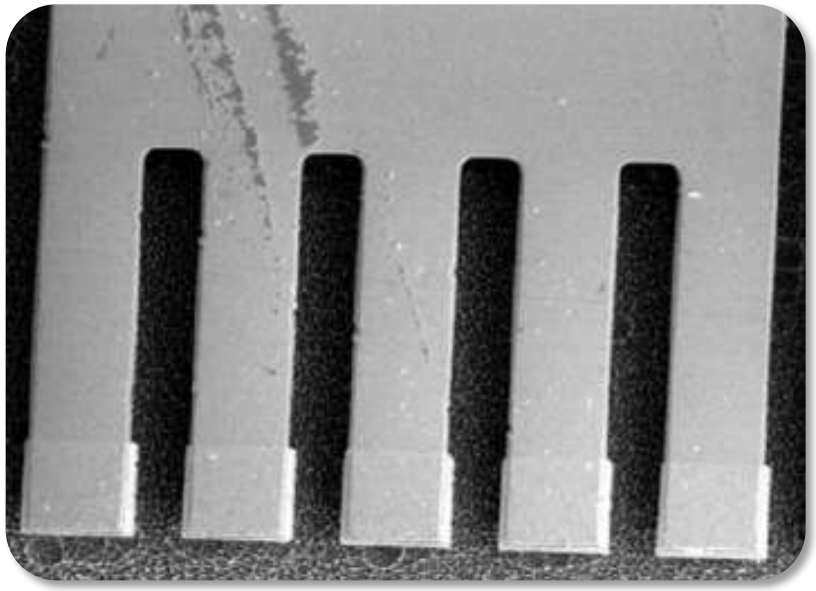

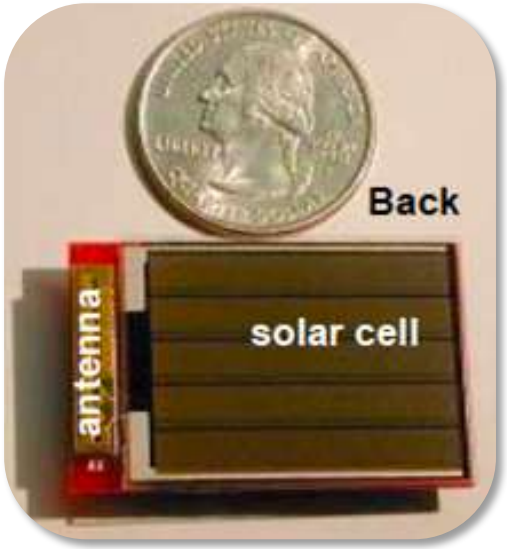

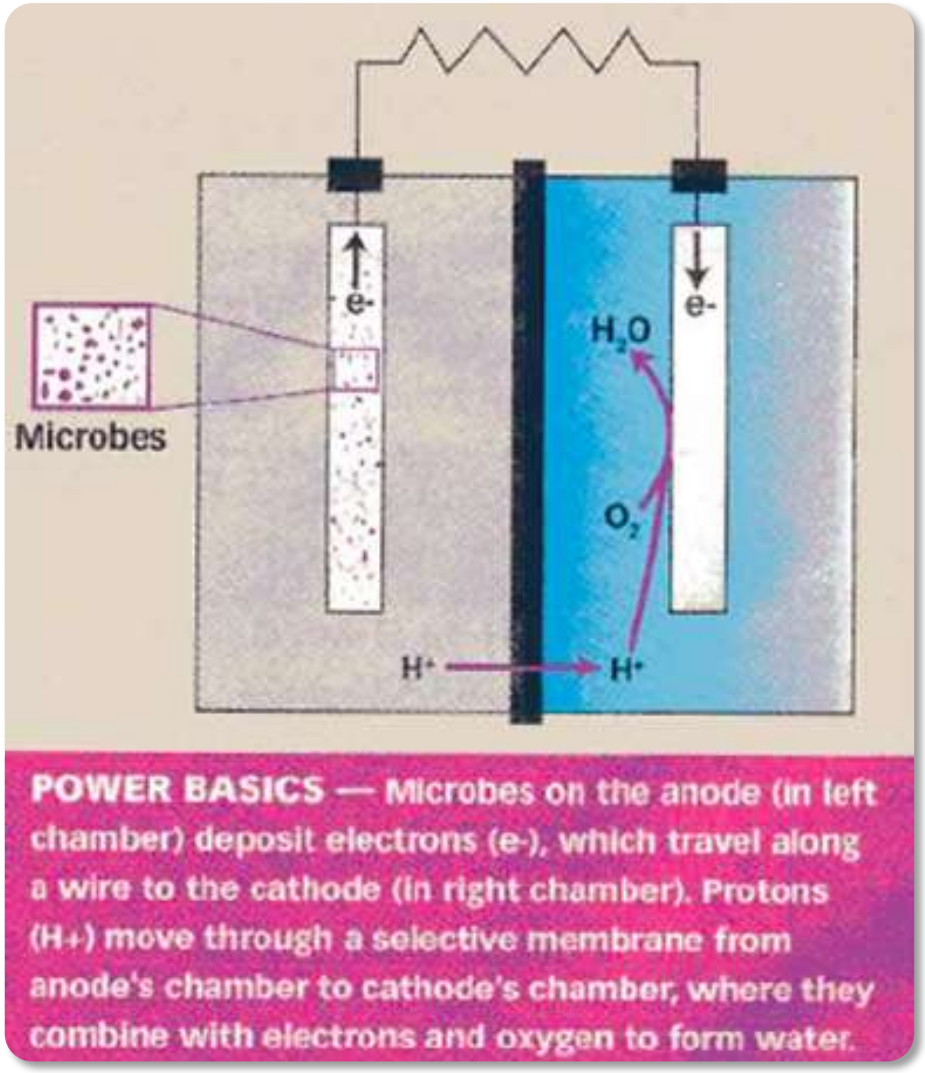

2.1.2. Estimate of typical harvested power values

SOURCE		SOURCE CHARACTERISTICS	PHYSICAL EFFICIENCY	HARVESTED POWER
PHOTOVOLTAIC				
Office		0.1mW/ cm^2	10-24%	10 μW/cm^2
Outdoor		100mW/ cm^2		10mW/ cm^2
VIBRATION/MOTION				
Human		0.5m@1Hz 1m/s^2@50Hz	max power is source dependent	4 μW/ cm^2
Industry		1m@5Hz 10m/s^2@1kHz		100 μW/ cm^2
THERMAL ENERGY				
Human		20mW/ cm^2	0.10%	25 μW/ cm^2
Industry		100 mW/ cm^2	3%	1-10mW/ cm^2
RF				
GSM	900MHz 1800MHz	0.3-0.03 μW/ cm^2 0.2-0.02 μW/ cm^2	50%	0.15-0.01 μW/ cm^2

Storing power

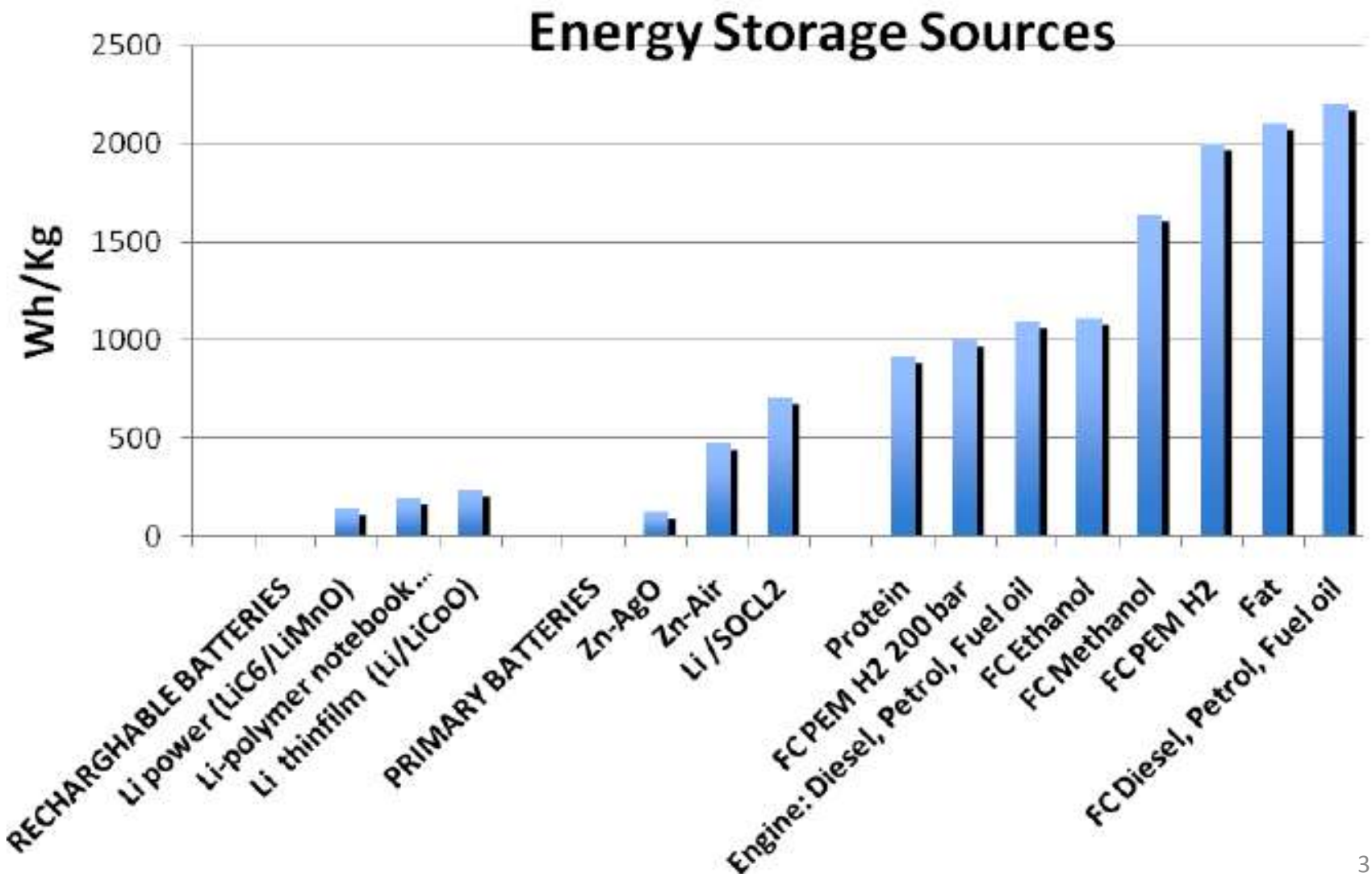

BATTERY	Thin film [35]	Medical [36]	Chip card
SUPPLIER	Front Edge Technology	Eagle Picher	Varta Microbattery
SYSTEM	Li-$LiCoO_2$-secondary	Li MnO_2 primary (secondary prototypes)	Li MnO_2 primary
DIMENSIONS [mm]	25×25×0.15	6.73 × 2.37 diameter	29×22×0.4
PACKAGE	thin glass, adhesive	welded Ti, glass	Metal foil, polymer seal
CAPACITY [mAh]	0.7	2.7 (at 30 μA)	25
SELF DISCHARGE	2 % / year	2 % / year	-
WEIGHT [g]	0.19	0.09	0.65
VOLUME [cm^3]	0.03	0.03	0.25
CYCLES	3500 (70%)	-	-
MAXIMUM TEMPERATURE	150 °C	-	-
ENERGY DENSITY [Wh/kg]	13	77	115
ENERGY DENSITY [Wh/l]	26	233	300
	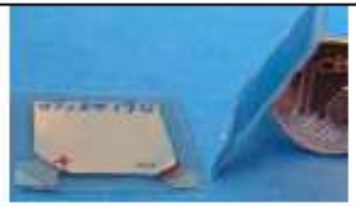		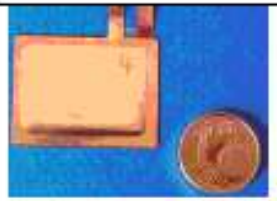

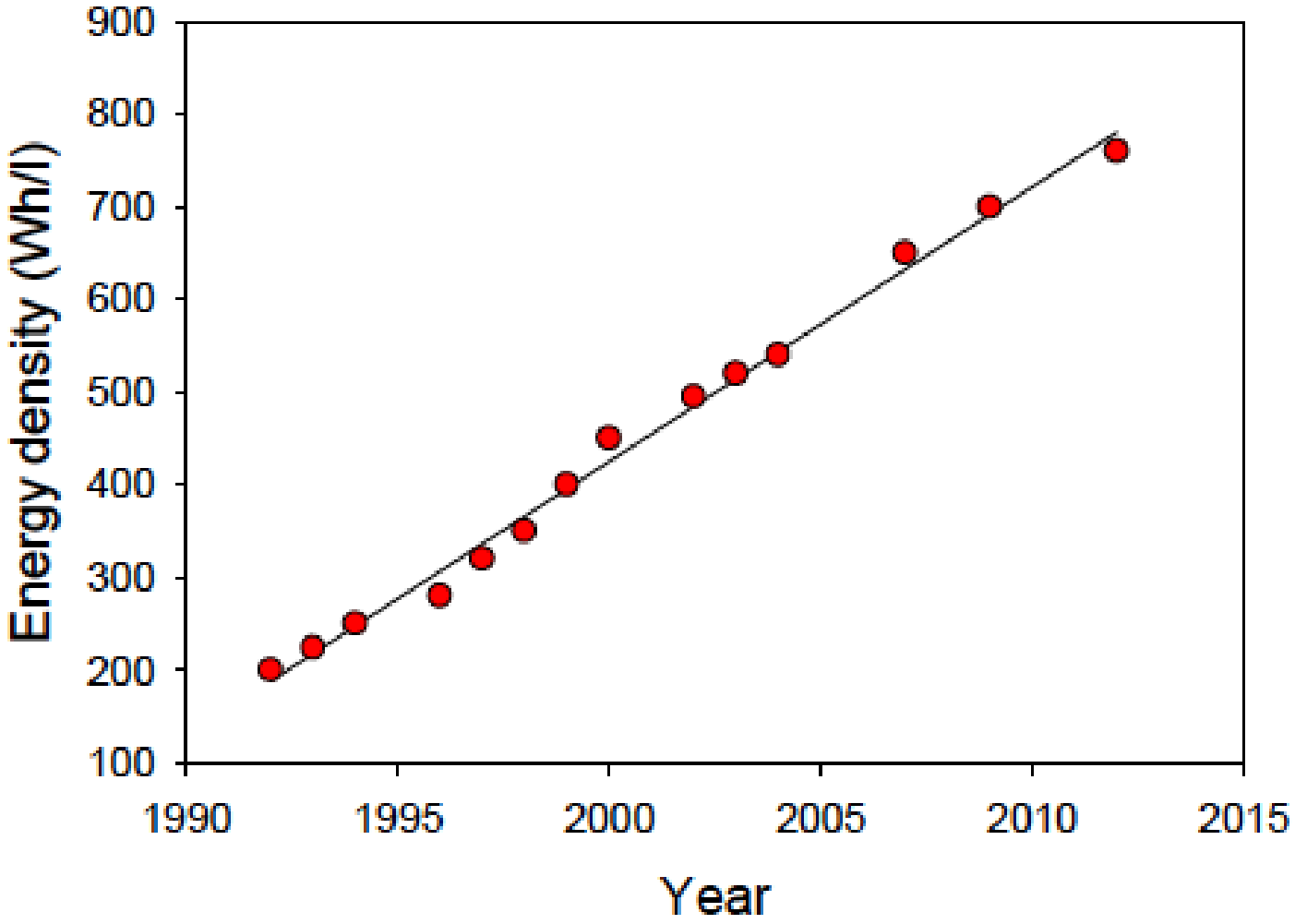
900
800
700
600
500
400
300
200
100
Energy density (Wh/l)
1990
1995
2000
2005
2010
2015
Year

- **Lithium ion polymer battery** (LIPB, secondary, rechargeable)
  - Anode: Li metal, Li-carbon
  - Cathode: $LiCoO_2$, $LiMn_2O_4$, $LiFePO_4$
  - Electrolyte: Li^+ conducting polymer (PVdF, PEO) w/ Li salt
  - OCV: 3.6-3.7 V
  - Energy density (mass): 250 Wh/Kg

- **Lithium air battery** (LAB, primary or secondary)
  - Anode: Li metal
  - Cathode: graphite (w/catalyst)
  - Electrolyte: $LiPF_6$ in organic carbonates, PVdF
  - OCV: 2.9 V
  - Energy density (mass): 5000 Wh/Kg

Florianopolis-Brazil
F.Maloberti

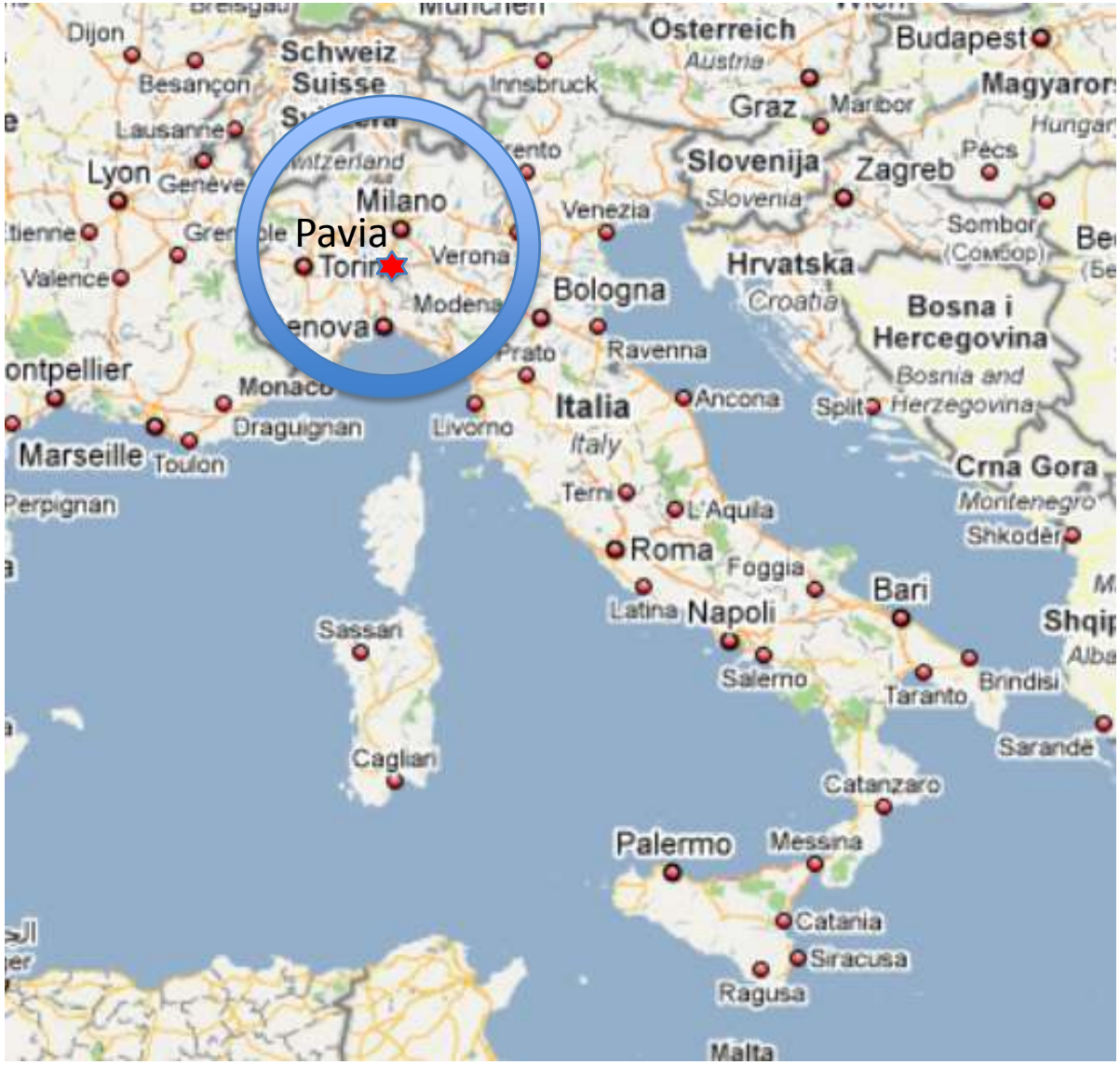

Year: 825 (theological and law school) 1361 (studium generale)

Famous Faculty: **A. Volta**, G. Cardano, C. Golgi, U. Foscolo

The University of Pavia is one of the oldest universities in Europe. An edict issued by King Lotarius quotes a higher education institution in Pavia as already established 825 A.D. This institution, mainly devoted to ecclesiastical and civil law as well as to divinity studies, was then elected as high educational centre for northern Italy. Enlarged and renovated by the Duke of Milan, Gian Galeazzo Visconti, it became the University of the Duchy, having been officially established as a studium generale by Emperor Charles IV in 1361.

VOLT comes after **Alessandro Volta,** Pavia Professor and Rector

On 20 March 1800, Volta informs the President of the Royal Society, Sir Joseph Banks, of the invention of the pile (battery). Volta virtually clinched the victory by constructing a device that would produce a large flow of electricity. Volta's device was an "electric battery"- the first in history. The invention of the battery lifted Volta's fame to its pinnacle.

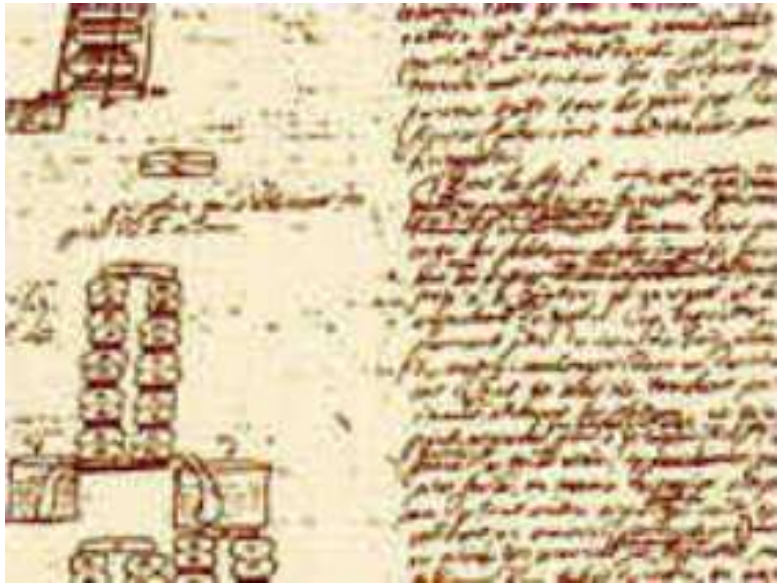

In June of the same year, Napoleon, to whom Volta had paid his respects in 1796 - reconfirms the scientist from Como Professor of Experimental Physics at the University of Pavia.

9.4-ENoB 1V 3.8µW 100kS/s SAR ADC ISSCC '08

A. Agnes, E. Bonizzoni, P. Malcovati, F. Maloberti, “A 9.4 ENoB, 1V, 3.8uW, 100 kS/s SAR-ADC with Time-Domain Comparator”, IEEE ISSCC Dig. Tech. Papers, pp. 246-610, Feb. 2008.

A. Agnes, E. Bonizzoni, P. Malcovati, F. Maloberti, “An Ultra-Low Power Successive Approximation A/D Converter with Time-Domain Comparator”, Analog Integrated Circuits and Signals Processing, vol. 64, pp. 183-190, Aug. 2010.

Design specifications:

- Supply voltage 1 ÷ 1.2V
- Sample rate 100kS/s
- FoM less than 100fJ per conv. step
- Power consumption less than 5uW
- Input range 0.8V
- 10-11 output Bit → LSB ≈ 780-390uV

$$FoM = \frac{P}{2^{ENOB} 2 f_B}$$

9.4-ENoB 1V 3.8µW 100kS/s SAR ADC ISSCC '08

- 0.18-µm CMOS 2Poly, 5Metal
- Core area 0.24 mm^2 - Die area 0.7 mm^2

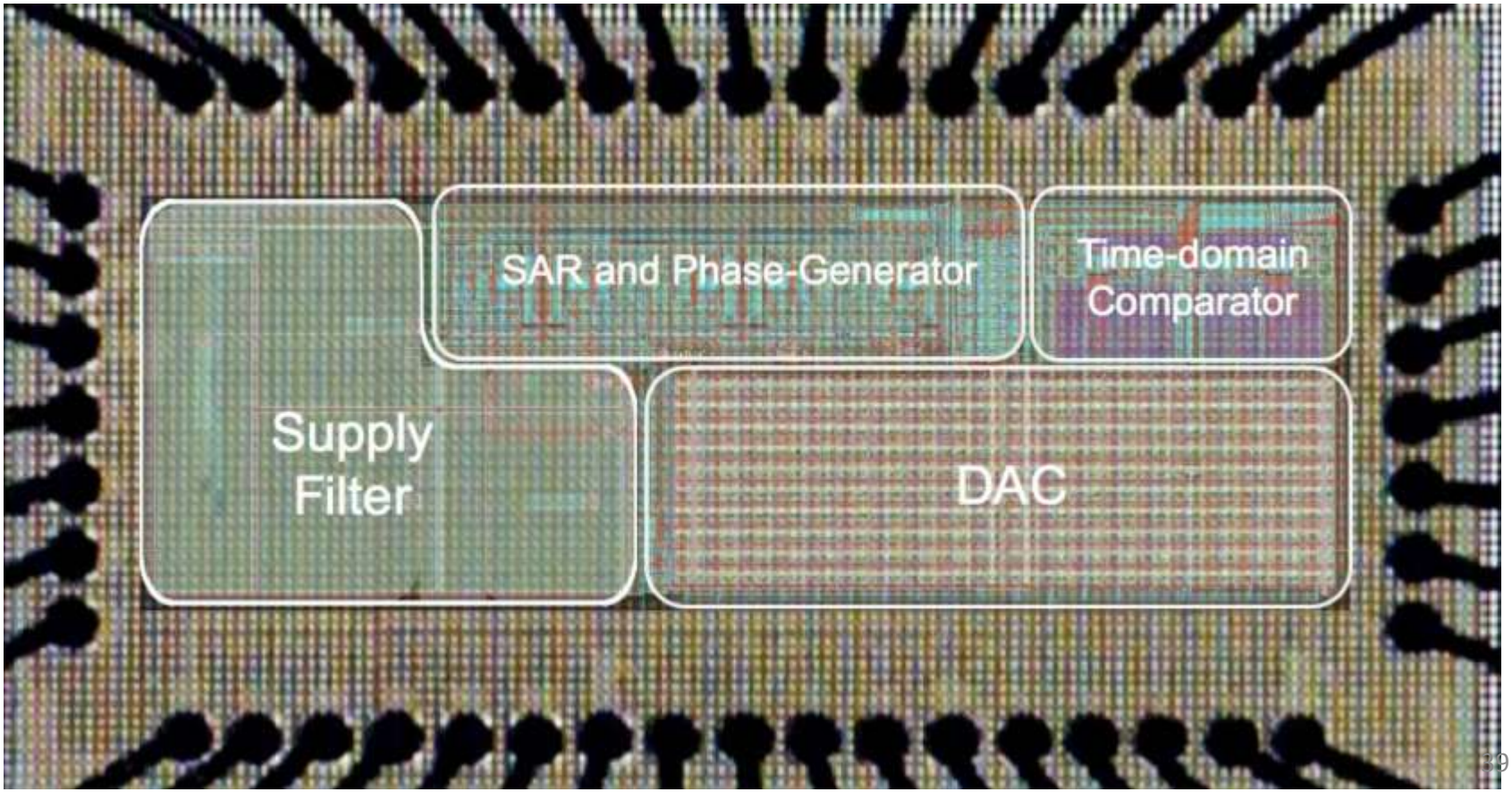

9.4-ENoB 1V 3.8µW 100kS/s SAR ADC ISSCC '08

PERFORMANCE SUMMARY

Process	0.18-µm CMOS
Area	0.7mm^2
Voltage Supply	0.8 to 1.8V
Clock Frequency	Max 1.4MHz
Sampling Rate	Max 100kS/s
Power Consumption	3.8µW @ 1V
SNDR	58
ENOB	9.4 Bit
FoM	56 fJ/conv. step

12 μA Chopper Amplifier ISSCC '10

M. Belloni, E. Bonizzoni, A. Fornasari, and F. Maloberti, "A Micropower Chopper-Correlated Double-Sampling Amplifier with 2μV Standard Deviation Offset and 37nV/sqrt(Hz) Input Noise Density", IEEE ISSCC Dig. Tech. Papers, pp. 76-77, Feb. 2010.

M. Belloni, E. Bonizzoni, A. Fornasari, and F. Maloberti, "A Micropower Chopper-CDS Operational Amplifier", IEEE Journal of Solid-State Circuits, vol. 45, n. 12, pp. 2521-2529, Dec. 2010.

- Supply Voltage from 1.8 V to 5 V
- Common Mode Input Range from 0 to 5 V
- Ripple Free Operation
- Very High DC Gain (>150 dB)
- Minimum Residual Offset
- Current Consumption Less than 15 μA
- Chopping Frequency = 500 kHz

12 μA chopper Amplifier ISSCC '10

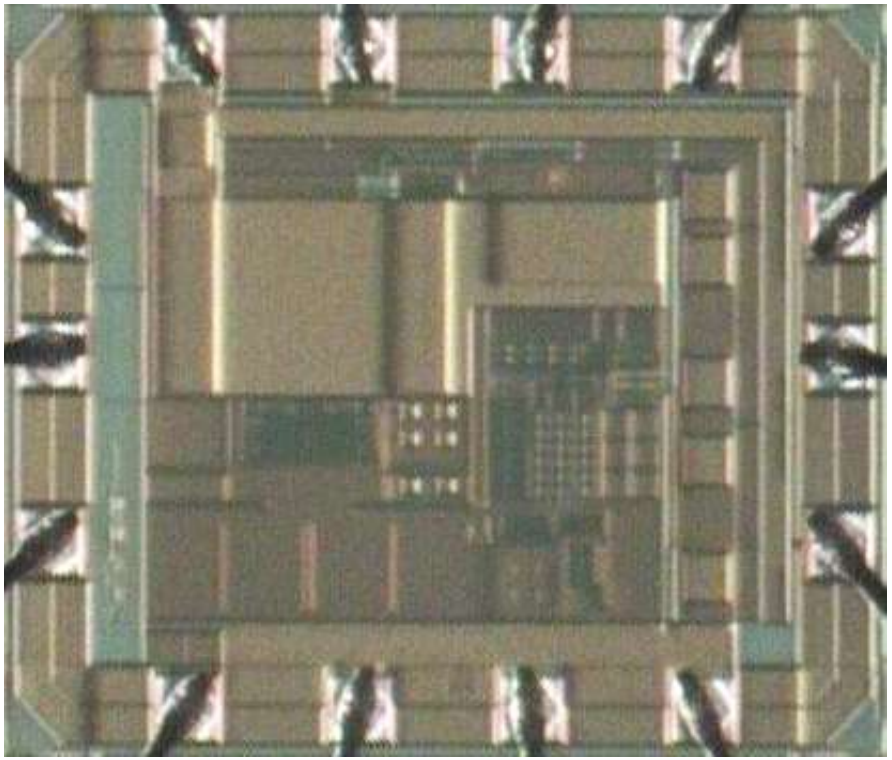

- Mixed 0.18-0.5μm 5V CMOS
- Dual poly
- 6 metal layers
- Natural transistors available
- Chip area: 1.21 mm x 0.95 mm (including pads)

12 μA chopper Amplifier ISSCC '10

Supply Voltage	1.8→5V
Chopping Frequency	500kHz
Input Noise Density at DC	37nV/√Hz
Offset Voltage Standard Deviation	1.94μV
Analog Supply Current	12.8μA
Digital Supply Current	1.6μA
Common Mode Input Range	0→5V
GBW (extrapolated)	260kHz
Offset Temperature Dependence	<0.03μV/°C
Process	Mixed 0.18-0.5μm CMOS
Chip Area (Including Pads)	1.21mm x 0.95mm
Noise Efficiency Factor	5.5

Micropower sub 1-V band-gap

Bandgap voltage generators generate a voltage almost temperature independent. They are important as reference of data converters.

They use two terms one PTAT and the other CTAT (proportional and complementayr to the absolute temperature) one balancing the other

Low power and low voltage are very important for portable applications. The voltage of a single solar cell is about 0.6-0.7 V.

This work generates 0.193 V.

The current consumption is 480nA with supplies ranging from 1V to 0.65V.

Micropower sub 1-V band-gap Unpublished

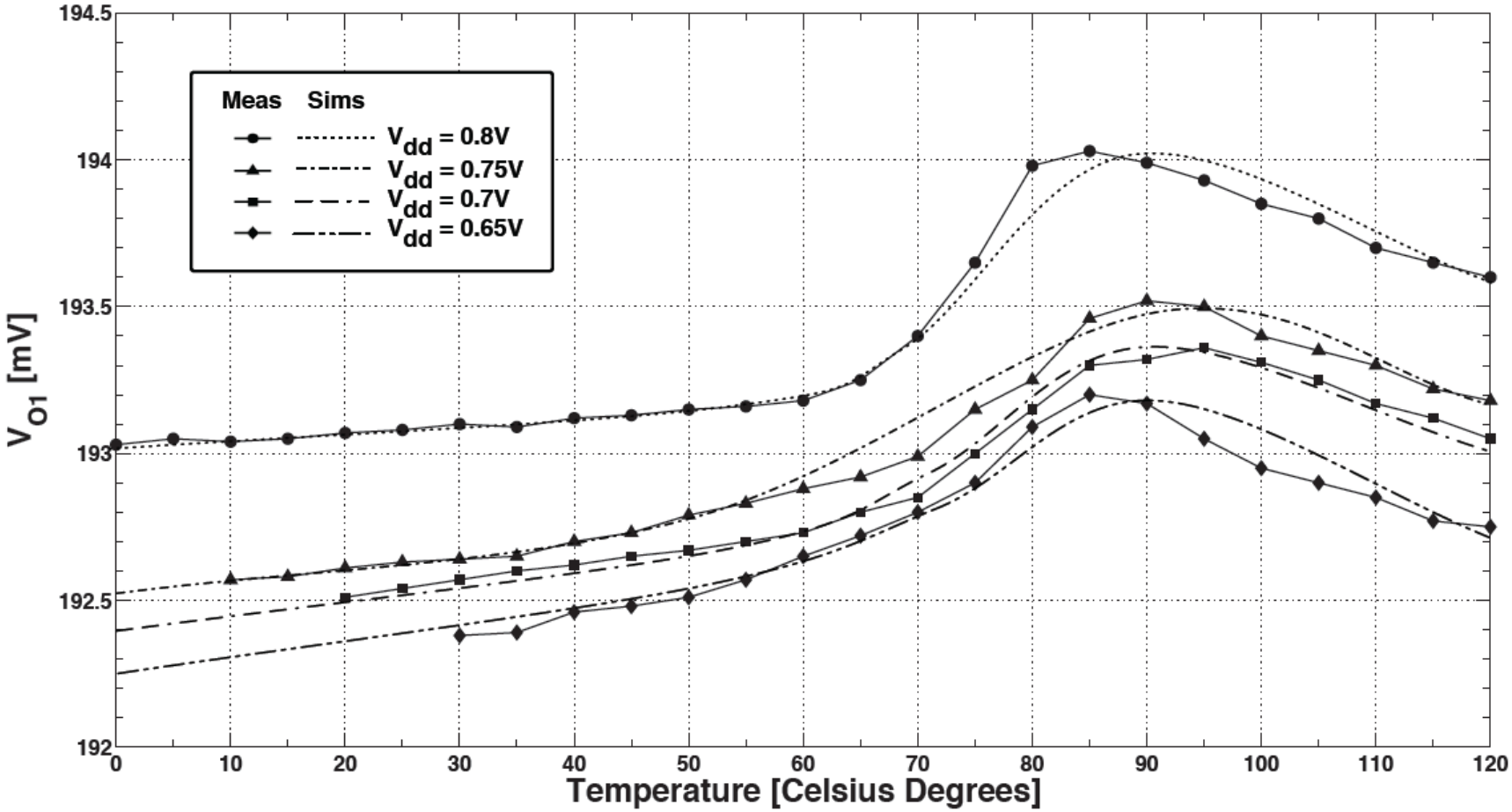

Micropower sub 1-V band-gap Unpublished

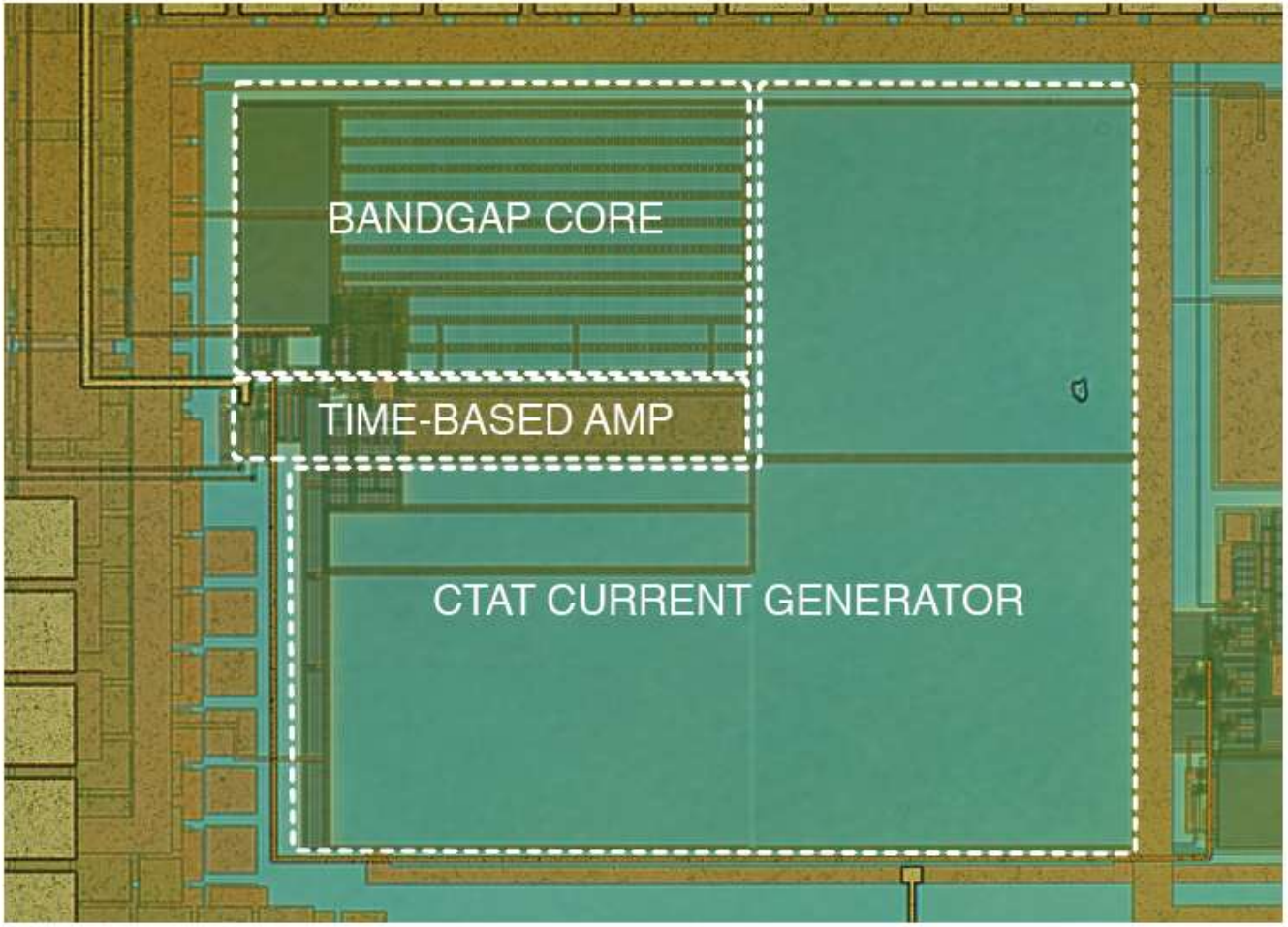

INCREMENTAL ADC SENSOR INTERFACE

E. Bonizzoni, A. Pena Perez, H. Caracciolo, D. Stoppa, F. Maloberti, “An incremental ADC sensor interface with input switch-less integrator featuring 220-nVrms resolution with 30-mV input range”, Proc. European Solid-State Circuits Conference (ESSCIRC), pp. 389-392, Sept. 2012.

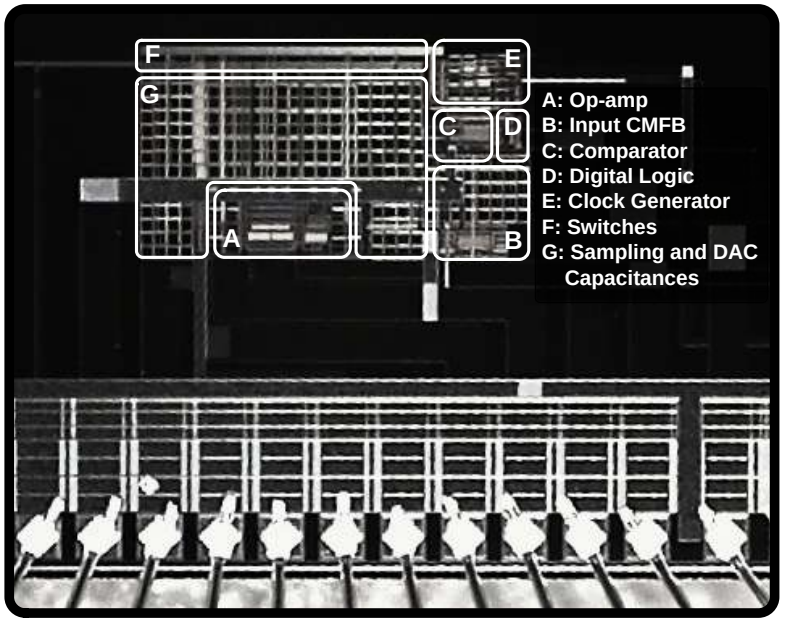

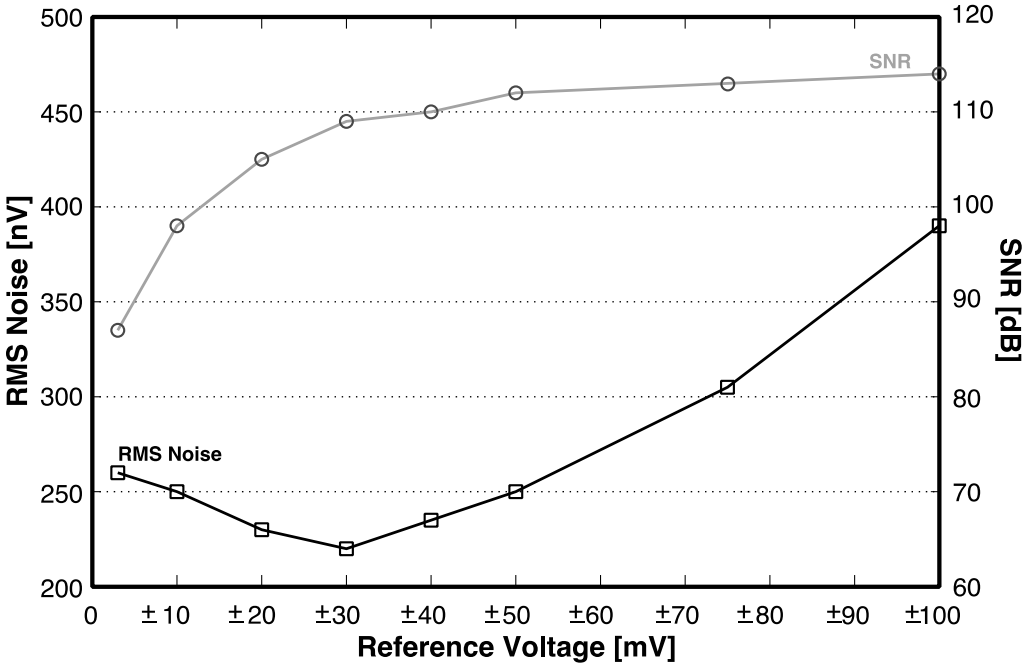

SAR Data Converter

Two-bit per stage, 8-bit 400MS/s, 65 nm CMOS

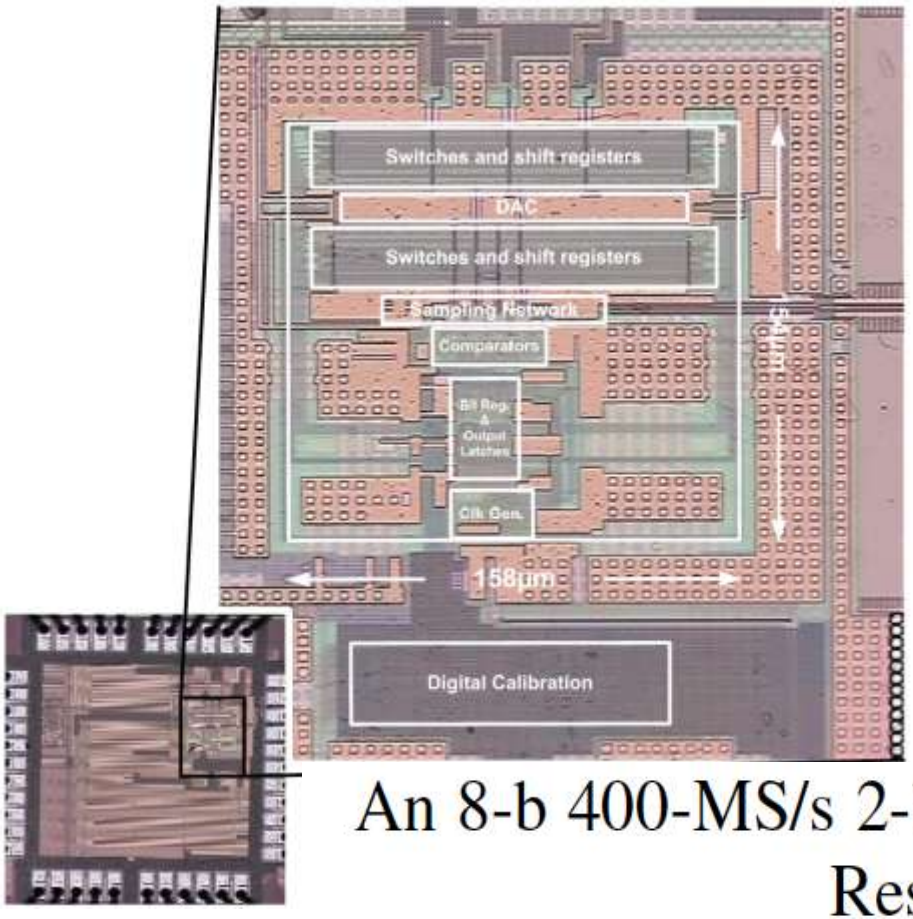

Architecture	SAR	
Technology (nm)	65	
Resolution (bits)	8	
Sampling Rate (MS/s)	400	250
Supply Voltage (V)	1.2	1
SNDR (dB)	44.5	46.7
Power (mW)	4	1.8
FOM1 @ Low f_{in} (fJ/Conv.-step)	73	42
FOM2 @ Nyquist f_{in} (fJ/Conv.-step)	117	60
Active Area (mm^2)	0.028	

An 8-b 400-MS/s 2-b-Per-Cycle SAR ADC With Resistive DAC

He-Gong Wei, *Member, IEEE*, Chi-Hang Chan, *Student Member, IEEE*, U-Fat Chio, Sai-Weng Sin, Seng-Pan U, *Senior Member, IEEE*, Rui Paulo Martins, *Fellow, IEEE*, and Franco Maloberti, *Fellow, IEEE*

IEEE JOURNAL OF SOLID-STATE CIRCUITS, VOL. 47, NO. 11, NOVEMBER 2012

A 50-fJ 10-b 160-MS/s Pipelined-SAR ADC Decoupled Flip-Around MDAC and Self-Embedded Offset Cancellation

Yan Zhu, *Member, IEEE*, Chi-Hang Chan, *Student Member, IEEE*, Sai-Weng Sin, *Member, IEEE*, Seng-Pan UBen, *Senior Member, IEEE*, Rui Paulo Martins, *Fellow, IEEE*, and Franco Maloberti

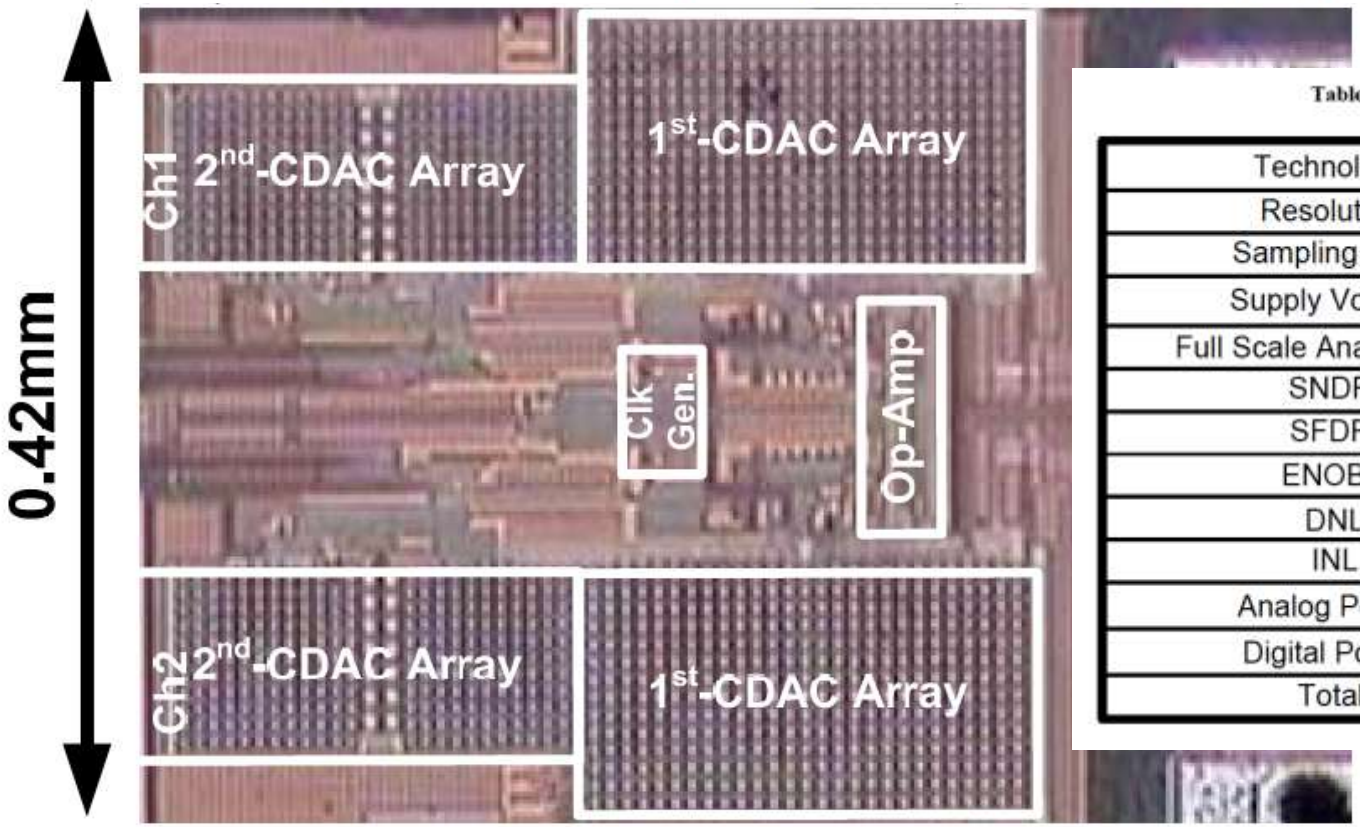

Table IV Summary of performance

Technology	65-nm CMOS
Resolution	10-bit
Sampling Rate	160-MS/s
Supply Voltage	1.1-V
Full Scale Analog Input	1.1-V_{PP}
SNDR	55.4dB
SFDR	61.3dB
ENOB	8.9-bit
DNL	+0.46/-0.3LSB
INL	+1.3/-1.7LSB
Analog Power	1.35mW
Digital Power	1.37mW
Total	2.72mW

~~The World of Analog Micropower~~

The World of Systems with micro-power consumption

MULTIDISCIPLINARITY

System matters … then, single function

Power state-of-the-art of a single component or even the low-power of macro-functions does not make much sense anymore

For this case

Reducing the power consumption of the analog interface does not help …

Another reflection

Moore than Moore is pushing
Technology in a “different” direction

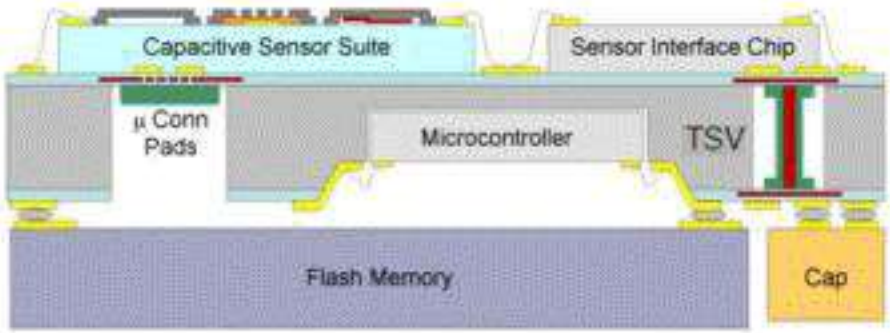

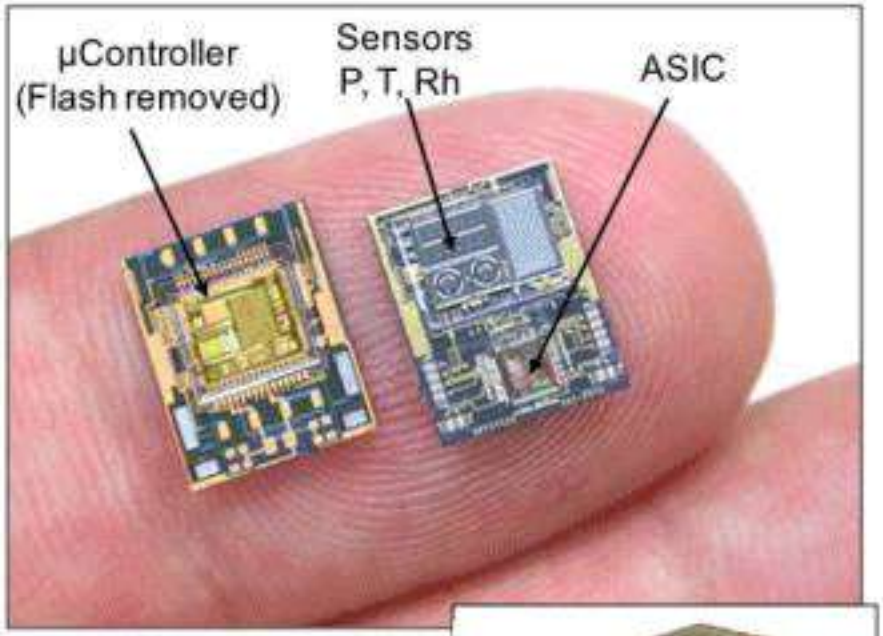

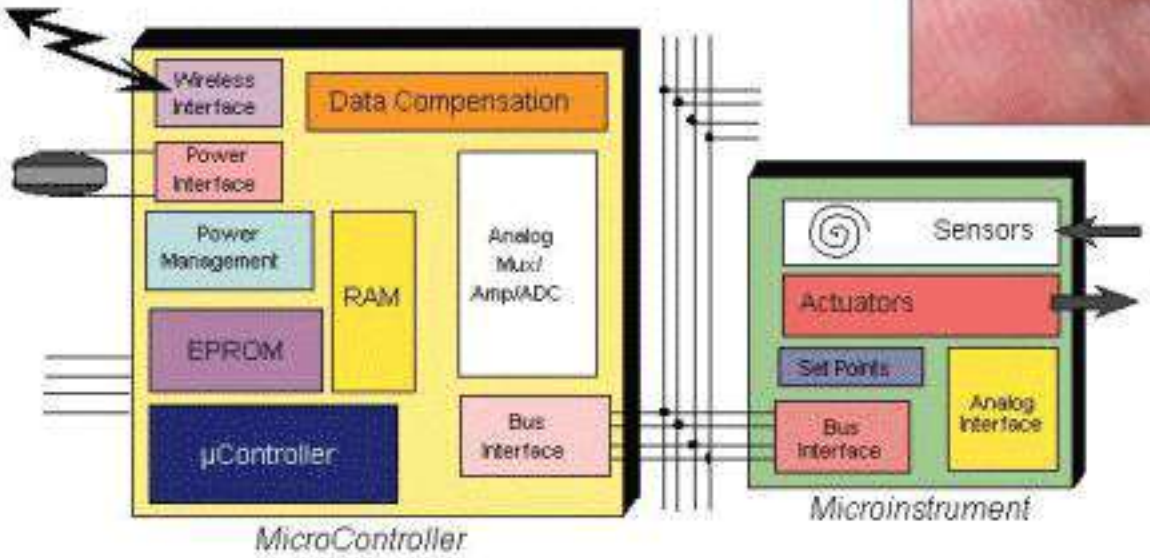

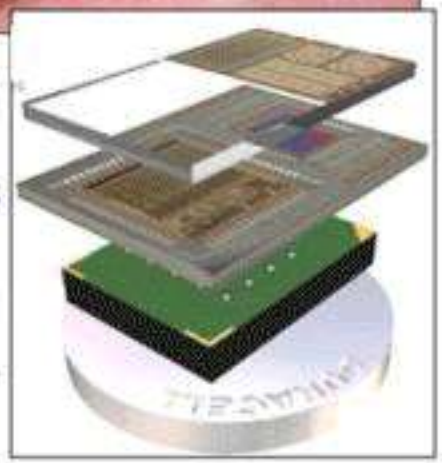

Another reflection

Florianopolis-Brazil
F.Maloberti

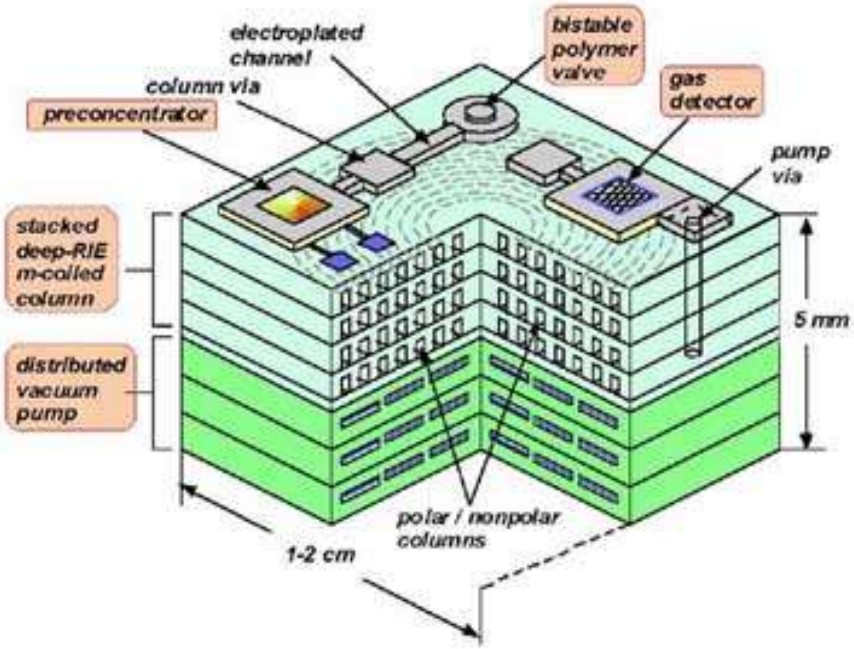

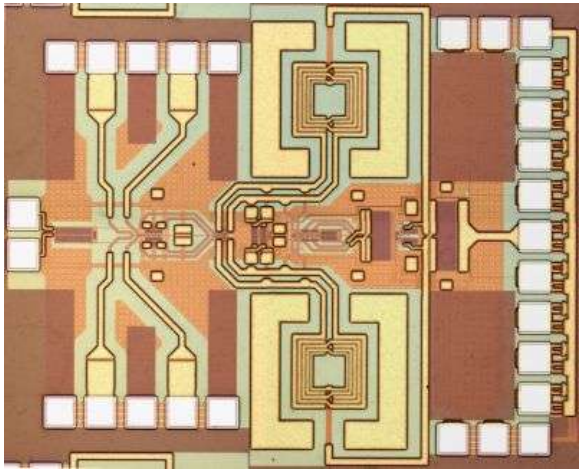

Don't just focus on deep submicron technologies, other technologies and Method can be disruptive (and rewarding)

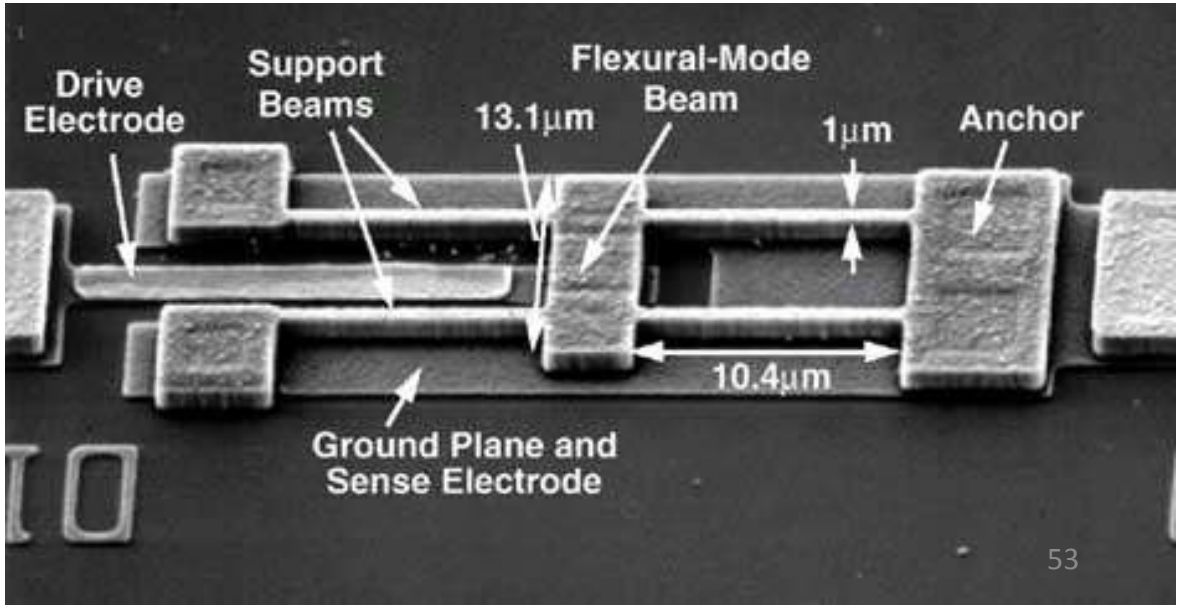

Recommendation:

Think out of the box and enjoy the world of analog micropower

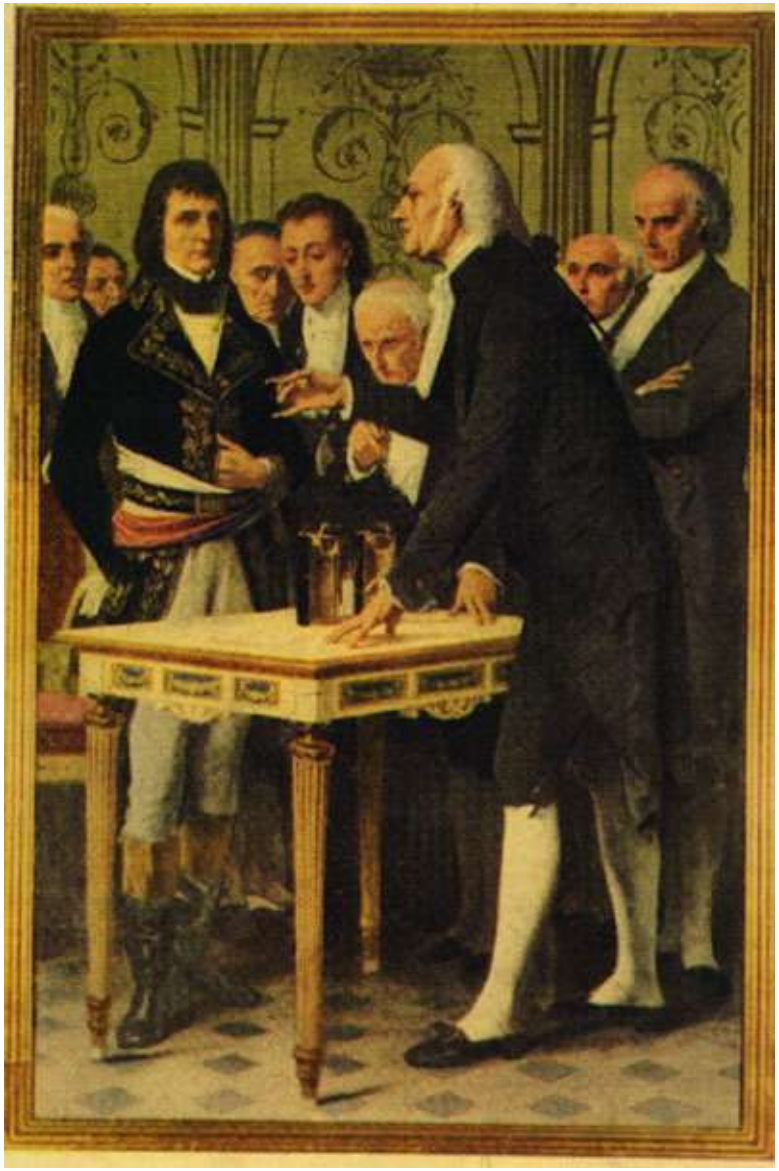

Thank you

The pile: Invented by Alessandro Volta
Professor at University of Pavia